WARRANTY REGISTRATION & DEALER INSPECTION FORM

The following section contains the necessary documents used to register a new BBI unit for warranty. In order to activate the new equipment warranty, these forms should be returned to BBI no later than 30 (thirty) days from the date of sale to the end user.
These forms are in triplicate and distributed as follows:

1. Dealer retains one set for his / her records
2. One set returned to BBI
3. One set remains in operator's manual and given to end user at time of delivery

These documents are as follows:

Dealer Inspection Form

This form is completed when the dealer is preparing to deliver the new unit to the end user. It certifies the dealer has inspected the equipment, it operates correctly and all safety signs and guards are in place. Any modifications made to the equipment by the dealer should also be noted.

Customer's Warranty Registration

This form certifies that the customer was instructed on safe and proper use, the equipment operates correctly, warranty was explained and a copy of the owner's manual was delivered. This form also certifies that if electronic rate control is installed, the customer has been given proper instruction as to the operation of the system. Furthermore, a dealer service contact name and number has been provided.

Important Tractor-Supplied Hydraulic Systems Information

This form certifies that if the unit is equipped with Tractor Supplied Hydraulics, proper return requirements were discussed.

**Please return the executed copies to BBI within 30 days to activate the warranty.
The copies can be sent via email to: service@bbispreaders.com, faxed to: 706-778-2787,
or mailed to: BBI Spreaders P.O. Box 630 Cornelia, GA 30531.**

BBI

DELIVERY INSPECTION - DEALER COPY

Endurance Pull-Type

WARRANTY REGISTRATION & DEALER INSPECTION FORM

To have a fully-executed warranty, the dealer must fill this form out at time of delivery. There is no warranty without a fully-executed warranty registration and dealer inspection form.

Model & Serial Number: _____

DEALER EQUIPMENT AND SAFETY INSPECTION REPORT

- ☐ Equipment is properly assembled
- ☐ Equipment configured as ordered
- ☐ Equipment is functional and operates properly
- ☐ All guards are in place
- ☐ All warning signs and safety signs are in place
- ☐ Modifications to equipment (write details below)

Comments / equipment modifications: _____

Signature of Set-Up Person	Dealer Name	Date

BBI

CUSTOMER'S WARRANTY REGISTRATION - DEALER COPY

Endurance Pull-Type

Dealer name: _____	Customer name: _____
Address: _____	Address: _____
_____	_____
City, State, Zip: _____	City, State, Zip: _____
_____	_____
Date of Delivery: _____	Phone #: _____
Model & Serial Number: _____	Email Address: _____
_____	

CUSTOMER'S WARRANTY REGISTRATION

Customer's warranty protection on this equipment is only valid when this certification form is completed and signed by both the customer and dealer at the time of delivery of the equipment and registered with the manufacturer.

DEALER'S SIGNATURE INDICATES:

- ☐ Equipment operates properly and customer was instructed in safe and proper operation
- ☐ Customer received a copy of the operator's manual
- ☐ Warranty was explained to the customer
- ☐ Electronic Rate control programmed and operates correctly

Signature of Dealer	Dealer Name	Date

CUSTOMER'S SIGNATURE INDICATES:

- ☐ Acceptance of equipment
- ☐ Receipt of owners manual and clear understanding of warranty
- ☐ All systems were explained and understood
- ☐ Receipt of instructions on safe and proper use
- ☐ If equipped with Electronic Rate control, this system was explained and owners manual was received
- ☐ A dealer parts/service representative contact has been provided (see page 31)

Signature of Customer	Customer Name	Date

BBI

IMPORTANT TRACTOR-SUPPLIED HYDRAULIC SYSTEMS INFORMATION

IMPORTANT!

On units equipped with tractor-supplied hydraulics the return must be connected to a 0 (zero) pressure return. Gear motor systems require no pressure return.

DO NOT connect the system unless 0 (zero) pressure can be verified on return or damage to the motors will result! Connecting to a pressurized return will VOID THE WARRANTY.

Various tractor manufacturers use different language for their brand to identify a 0 (zero) pressure return. Please consult your manufacturer to insure the proper 0 (zero) pressure return is identified.

To maintain maximum operational efficiency, your tractor needs to have 32 GPM (Gallons Per Minute) overall, with 2 remotes each at 16 GPM and 2,000 PSI (Pounds per Square Inch) in order to operate the tractor-supplied hydraulic system.

Signature of Dealer	Dealer Name	Date
Signature of Customer	Customer Name	Date

BBI

WARRANTY REGISTRATION & DEALER INSPECTION FORM

To have a fully-executed warranty, the dealer must fill this form out at time of delivery. There is no warranty without a fully-executed warranty registration and dealer inspection form.

Model & Serial Number: _____

DEALER EQUIPMENT AND SAFETY INSPECTION REPORT

- ☐ Equipment is properly assembled
- ☐ Equipment configured as ordered
- ☐ Equipment is functional and operates properly
- ☐ All guards are in place
- ☐ All warning signs and safety signs are in place
- ☐ Modifications to equipment (write details below)

Comments / equipment modifications: _____

Signature of Set-Up Person	Dealer Name	Date

BBI

CUSTOMER'S WARRANTY REGISTRATION - BBI COPY

Endurance Pull-Type

Dealer name: _____

Address: _____

_____

City, State, Zip: _____

_____

Date of Delivery: _____

Model & Serial Number: _____

_____

Customer name: _____

Address: _____

_____

City, State, Zip: _____

_____

Phone #: _____

Email Address: _____

CUSTOMER'S WARRANTY REGISTRATION

Customer's warranty protection on this equipment is only valid when this certification form is completed and signed by both the customer and dealer at the time of delivery of the equipment and registered with the manufacturer.

DEALER'S SIGNATURE INDICATES:

- ☐ Equipment operates properly and customer was instructed in safe and proper operation
- ☐ Customer received a copy of the operator's manual
- ☐ Warranty was explained to the customer
- ☐ Electronic Rate control programmed and operates correctly

Signature of Dealer _____ Dealer Name _____ Date _____

CUSTOMER'S SIGNATURE INDICATES:

- ☐ Acceptance of equipment
- ☐ Receipt of owners manual and clear understanding of warranty
- ☐ All systems were explained and understood
- ☐ Receipt of instructions on safe and proper use
- ☐ If equipped with Electronic Rate control, this system was explained and owners manual was received
- ☐ A dealer parts/service representative contact has been provided (see page 31)

Signature of Customer _____ Customer Name _____ Date _____

BBI

IMPORTANT TRACTOR-SUPPLIED HYDRAULIC SYSTEMS INFORMATION

IMPORTANT!

On units equipped with tractor-supplied hydraulics the return must be connected to a 0 (zero) pressure return. Gear motor systems require no pressure return.

DO NOT connect the system unless 0 (zero) pressure can be verified on return or damage to the motors will result! Connecting to a pressurized return will VOID THE WARRANTY.

Various tractor manufacturers use different language for their brand to identify a 0 (zero) pressure return. Please consult your manufacturer to insure the proper 0 (zero) pressure return is identified.

To maintain maximum operational efficiency, your tractor needs to have 32 GPM (Gallons Per Minute) overall, with 2 remotes each at 16 GPM and 2,000 PSI (Pounds per Square Inch) in order to operate the tractor-supplied hydraulic system.

Signature of Dealer	Dealer Name	Date
Signature of Customer	Customer Name	Date

BBI

OPERATOR MANUAL

This manual is valid for all Hydraulic
Endurance Pull Type Configurations

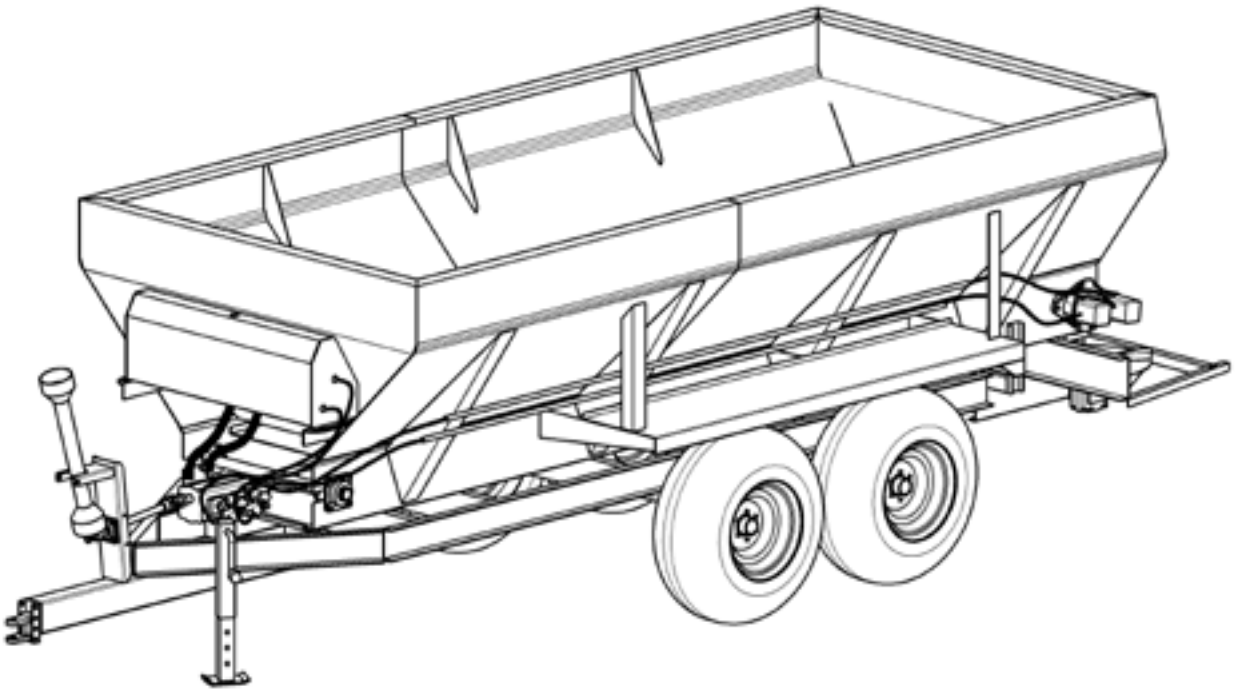

TABLE OF CONTENTS

A MESSAGE FROM BBI

The BBI team takes pride in producing superior spreaders that will provide many years of service. In bringing the best spreaders to the industries of agriculture, poultry, and construction, we carefully select components with a proven performance record and availability. Our skilled employees give special attention to detail in design and assembly to make certain our equipment will meet or exceed your expectations in the field.

Our parts department stands ready to serve you with replacement parts at affordable prices. We stock a large inventory to assure support for our customers, and take pride in offering “same day service” for those orders received before mid-afternoon.

At BBI, we provide quality service with a friendly atmosphere. Our dealers can offer service assistance, or you may contact us directly. We strive to quickly provide solutions for your needs in order to minimize any downtime or delays.

Our company takes safety very seriously, and we give great concern to our products in an ongoing effort to reduce any potential safety issues, whether with equipment or in the workplace. We design our equipment intentionally to minimize pinch points and provide guards where they do exist. BBI places decals on our equipment to identify and caution against areas containing pinch points and hazardous moving parts.

Please be sure that those who operate BBI equipment receive proper training. *Never conduct maintenance or repairs unless the equipment is fully disabled with the power source turned off. Never stand inside the unit while in operation or moving. Since we design our spreaders to project materials in patterns ranging from 30 to 90 feet, depending on the specific equipment, standing too close to equipment can result in injury. Please use extreme caution when operating all farm equipment.*

Thank you for choosing BBI spreading equipment. You will be glad you did.

Richard B. Hagler

President

“Driving Value”

WARRANTY REGISTRATION & DEALER INSPECTION FORM

To have a fully-executed warranty, the dealer must fill this form out at time of delivery. There is no warranty without a fully-executed warranty registration and dealer inspection form.

Model & Serial Number: _____

DEALER EQUIPMENT AND SAFETY INSPECTION REPORT

- ☐ Equipment is properly assembled
- ☐ Equipment configured as ordered
- ☐ Equipment is functional and operates properly
- ☐ All guards are in place
- ☐ All warning signs and safety signs are in place
- ☐ Modifications to equipment (write details below)

Comments / equipment modifications: _____

Signature of Set-Up Person	Dealer Name	Date

CUSTOMER'S WARRANTY REGISTRATION - CUSTOMER COPY

Endurance Pull-Type

Dealer name: _____

Address: _____

_____

City, State, Zip: _____

_____

Date of Delivery: _____

Model & Serial Number: _____

_____

Customer name: _____

Address: _____

_____

City, State, Zip: _____

_____

Phone #: _____

Email Address: _____

CUSTOMER'S WARRANTY REGISTRATION

Customer's warranty protection on this equipment is only valid when this certification form is completed and signed by both the customer and dealer at the time of delivery of the equipment and registered with the manufacturer.

DEALER'S SIGNATURE INDICATES:

- ☐ Equipment operates properly and customer was instructed in safe and proper operation
- ☐ Customer received a copy of the operator's manual
- ☐ Warranty was explained to the customer
- ☐ Electronic Rate control programmed and operates correctly

Signature of Dealer _____ Dealer Name _____ Date _____

CUSTOMER'S SIGNATURE INDICATES:

- ☐ Acceptance of equipment
- ☐ Receipt of owners manual and clear understanding of warranty
- ☐ All systems were explained and understood
- ☐ Receipt of instructions on safe and proper use
- ☐ If equipped with Electronic Rate control, this system was explained and owners manual was received
- ☐ A dealer parts/service representative contact has been provided (see page 31)

Signature of Customer _____ Customer Name _____ Date _____

BBI

IMPORTANT TRACTOR-SUPPLIED HYDRAULIC SYSTEMS INFORMATION

IMPORTANT!

On units equipped with tractor-supplied hydraulics the return must be connected to a 0 (zero) pressure return. Gear motor systems require no pressure return.

DO NOT connect the system unless 0 (zero) pressure can be verified on return or damage to the motors will result! Connecting to a pressurized return will VOID THE WARRANTY.

Various tractor manufacturers use different language for their brand to identify a 0 (zero) pressure return. Please consult your manufacturer to insure the proper 0 (zero) pressure return is identified.

To maintain maximum operational efficiency, your tractor needs to have 32 GPM (Gallons Per Minute) overall, with 2 remotes each at 16 GPM and 2,000 PSI (Pounds per Square Inch) in order to operate the tractor-supplied hydraulic system.

Signature of Dealer	Dealer Name	Date
Signature of Customer	Customer Name	Date

WARRANTY

BBI warrants, to the original user, that each product of its manufacture is free from defects in material and workmanship if serviced and operated under normal conditions for 180 days from the date of the customer's bill of sale.

BBI's obligation under this warranty is limited to the correcting of the defect(s) without charge at its factory or one of its authorized dealers. Transportation charges will be pre-paid. BBI requires the opportunity to examine all parts in question in order to determine the original cause of defect. Correction of such defects by repair to or supplying of replacements for defective parts shall constitute fulfillment of all obligations to the original user.

This warranty shall not apply to any BBI product which must be replaced because of normal wear, misuse, negligence or accident.

This warranty shall not apply to products which have been repaired or altered outside of the BBI factory without written factory authorization.

BBI shall not under any circumstances be liable for any incidental or consequential damages arising from the loss of property or other damages or loses owing to the failure or use of BBI products beyond the cost of repair or replacement of any defective product. The repair or replacement of defective product shall be the sole and only obligation of BBI.

EXCEPT AS SPECIFICALLY SET FORTH HEREIN, BBI MAKES NO WARRANTY ON ITS PRODUCTS (EXPRESSED, IMPLIED OR STATUTORY) INCLUDING, WITHOUT LIMITATION, NO WARRANTY OF FITNESS FOR A PARTICULAR PURPOSE OR MERCHANTABILITY.

No person, agent or dealer is authorized to give any warranties or make representations on behalf of BBI or assume for BBI any other liability in connection with any of its products unless made in writing by an officer of BBI.

Any warranty provision outside of these bounds needs to be negotiated before service commences. The warranty does not include transportation. Warranty service is provided by the dealer. It is the customer's responsibility to seek warranty from your dealer.

DEALER'S WARRANTY SERVICE CONTACT INFORMATION:

Dealer Service Representative: _____

Phone number: _____

Email: _____

SAFETY WARNINGS

Please read and understand the safety warnings contained in this manual before operation.

TAKE NOTE: THIS SAFETY ALERT SYMBOL, FOUND THROUGHOUT THIS MANUAL, IS USED TO CALL YOUR ATTENTION TO INSTRUCTIONS INVOLVING YOUR PERSONAL SAFETY AND THAT OF OTHERS; FAILURE TO FOLLOW THESE INSTRUCTIONS MAY RESULT IN INJURY OR DEATH.

In this manual and on safety signs placed on your spreader, the words “DANGER”, “WARNING,” “CAUTION,” and “IMPORTANT” are used to indicate the following:

DANGER!

Indicates an imminently hazardous situation that, if not avoided, WILL result in death or serious injury. This signal word is to be limited to the most extreme situations and typically for machine components that, for functional purposes, cannot be guarded.

WARNING!

Indicates a potentially hazardous situation that, if not avoided, COULD result in death or serious injury. This includes hazards that are exposed when guards are removed. It may also be used to alert against unsafe practices.

CAUTION!

Indicates a potentially hazardous situation that, if not avoided, MAY result in moderate or minor injury. It may also be used to alert against unsafe practices.

IMPORTANT!

Indicates critical information regarding potential damage or deterioration of equipment if not heeded. Generally would not involve personal injury.

We cannot stress enough the need for personal safety. BBI strongly urges you to make safety your top priority when operating any equipment. We firmly advise that anyone allowed to operate our equipment must be thoroughly trained and tested to prove that they understand the fundamentals for safe operation.

Our intention is that the following guidelines cover general usage of BBI equipment and assist you in avoiding accidents. There will be times when you will run into situations that are not covered in this section. At those times, the best standard to use is caution guided by your own common sense. If, at any time, you have a question concerning these guidelines, please call your authorized BBI dealer or the BBI factory at (800) 282-3570.

AVOID ACCIDENTS

Most accidents, whether they occur in industry, on the farm, at home, or on the highway, have causes stemming from the failure of individuals to follow simple and fundamental safety rules and precautions. For this reason, people can prevent most accidents by recognizing their real, potential causes and rectifying these causes before they ever allow accidents to occur.

Regardless of the care used in the design and construction of any type of equipment, there are many conditions that we cannot completely safeguard against without interfering with reasonable accessibility and efficient operation.

A CAREFUL OPERATOR IS THE BEST INSURANCE AGAINST AN ACCIDENT. THE COMPLETE OBSERVANCE OF ONE SIMPLE RULE WOULD PREVENT THOUSANDS OF SERIOUS INJURIES EACH YEAR.

THAT RULE IS:

NEVER CLEAN, OIL, OR ADJUST A MACHINE WHILE IT IS UNDER POWER.
- National Safety Council

CAUTION!

If you use your spreader to transport chemicals, check with your chemical supplier regarding the applicable DOT (Department of Transportation) regulations.

SAFETY DECALS

DECAL MAINTENANCE INSTRUCTIONS

1. Keep safety decals and signs clean and legible at all times.
2. Replace safety decals and signs that are missing or have become illegible.
3. Replaced parts that displayed a safety sign should also display the current safety sign.
4. Safety Decals are available from your local BBI dealer's Parts Department or our factory at BBI.

HAZARDS

1. Refrain from wearing loose fitting clothing on or around this piece of machinery. There are many places that loose clothing may become wrapped or pulled into devices.

2. Be aware of any moving parts on this machinery. Make sure that any person or persons on or around this piece of machinery are aware of the dangers as well. There are many places where injury may occur. Learn about your unit and the dangers of it. Always use caution in the operation of this piece of machinery.

3. Be sure that any individuals operating this equipment are trained and are aware of the dangers of this equipment.

4. Check for rocks, sticks, or anything of solid mass that may cause bodily harm to you or damage your unit.

5. Never attempt to work on or repair this piece of equipment while it is running. The P.T.O. and/or any other power source must be completely disengaged while working on this unit.

6. Those working around this unit should remain at least 100 feet from it while it is in operation. The fans are able to propel objects at a high speed up to this distance.

7. Be aware of the dangers of hydraulic systems. Hydraulic fluid is under very high pressure, and may cause serious injury if it hits the facial area, especially the eyes.

8. Shut down the entire system before checking hydraulic fluid level or adding fluid to the system.

PRIOR TO START-UP

Look over the entire unit, checking that all guards and fasteners are in place and fasteners are properly tightened, including lug nuts.

IMPORTANT!

NOTE: Do not load spreader with material until after completing initial start-up steps.

TRACTOR PREPARATION AND HOOK-UP

1. Adjust tractor hitch and drawbar as close to horizontal as you can. Adjust drawbar so hitch pin hole is directly below center line of PTO shaft. Make sure drawbar is in a stationary position.

2. Back tractor to spreader and connect with a minimum ¾” diameter hitch pin. Secure with a locking or cotter pin.

WARNING!

Pressurized hydraulic fluid can penetrate body tissue and result in death, serious infection, or other injuries. Fluid injected under skin must be IMMEDIATELY removed by a surgeon familiar with this type of injury. Make sure connections are tight and hoses and fittings are not damaged before applying system pressure. Leaks can be invisible. Keep away from suspected leaks. Relieve pressure before searching for leaks or performing any system maintenance.

IMPORTANT!

Ensure that you always keep your hose ends clean using a cloth. Never use a dirty coupling. If it does drop in the dirt, clean it up before you apply or damage to your tractor can occur.

3. Attach the safety chains.

4. Raise jack stand.

5. Either connect hydraulic hoses (as discussed in the Tractor-supplied Hydraulic Section), or connect PTO shaft to tractor PTO in the case of a Self-contained Hydraulic System. Be cautious of pinch points.

6. Install and connect Dual Switch Control Box and any other electronic controls needed.

7. Check to be sure that no loose parts or other material are in the hopper, on the conveyor or on the spinners. Be sure to remove any loose pieces and ensure all guards are in place.

PRIOR TO INITIAL START-UP - CHOOSE YOUR CONTROLS

This unit can be configured for either an electronic rate control system or manual controls. The decision for which configuration to apply needs to be made and implemented before starting up the unit.

1. TRACTOR-SUPPLIED HYDRAULIC SYSTEM

For spreaders powered by the tractor's hydraulic system, you will need to connect two sets of hydraulic remotes, one set for the conveyor system and one for the spinners.
Make sure that you match and properly connect the pressure and return hoses with each set of remote ports. *Mismatched hoses or return hoses that are not properly connected will cause damage to hydraulic components on the spreader.*

IMPORTANT!

On units equipped with tractor-supplied hydraulics the return must be connected to a 0 (zero) pressure return. Gear motor systems require no pressure return.

DO NOT connect the system unless 0 (zero) pressure can be verified on return or damage to the motors will result! Connecting to a pressurized return will VOID THE WARRANTY.

Various tractor manufacturers use different language for their brand to identify a 0 (zero) pressure return. Please consult your manufacturer to insure the proper 0 (zero) pressure return is identified.

To maintain maximum operational efficiency, your tractor needs to have 32 GPM (Gallons Per Minute) overall, with 2 remotes each at 16 GPM and 2,000 PSI (Pounds per Square Inch) in order to operate the tractor-supplied hydraulic system.

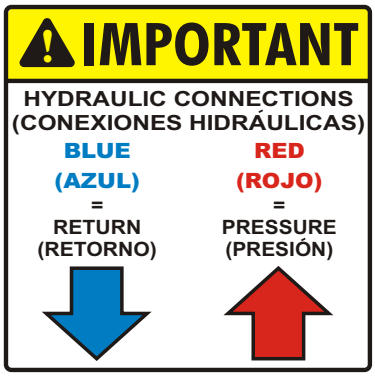

2. SELF-CONTAINED HYDRAULIC SYSTEM

One configuration for your spreader's hydraulic controls is to have a self-contained hydraulic reservoir, using the PTO to make the fluid flow from the pump.

3. MANUAL CONTROL SYSTEM

You will want to install the Dual Switch System to manually control the GR (optional) and Dump Valves; however the system will operate normally without the switchbox. You will use the manual flow control valves that are located in the Binary Manifold to control the bed chain speed and spinner speed. There is no precision without electronic controls however. Please reference the rate charts included in the appendix for additional manual rate setting guidance.

COMPONENTS OF THE STANDARD CL 250 STRAIGHT-RATE CONTROLLER

The CenterLine 250 - IC18 Electronic Control platform comes standard with the Endurance line of dry broadcast applicators, but the system can be adapted to multiple electronic configurations for dry rate controllers. The IC18 is also available for variable-rate applications as an ISOBUS 11783-compliant ECU and can plug up to any ISOBUS 11783 compliant Virtual Terminal with Task Control capabilities.

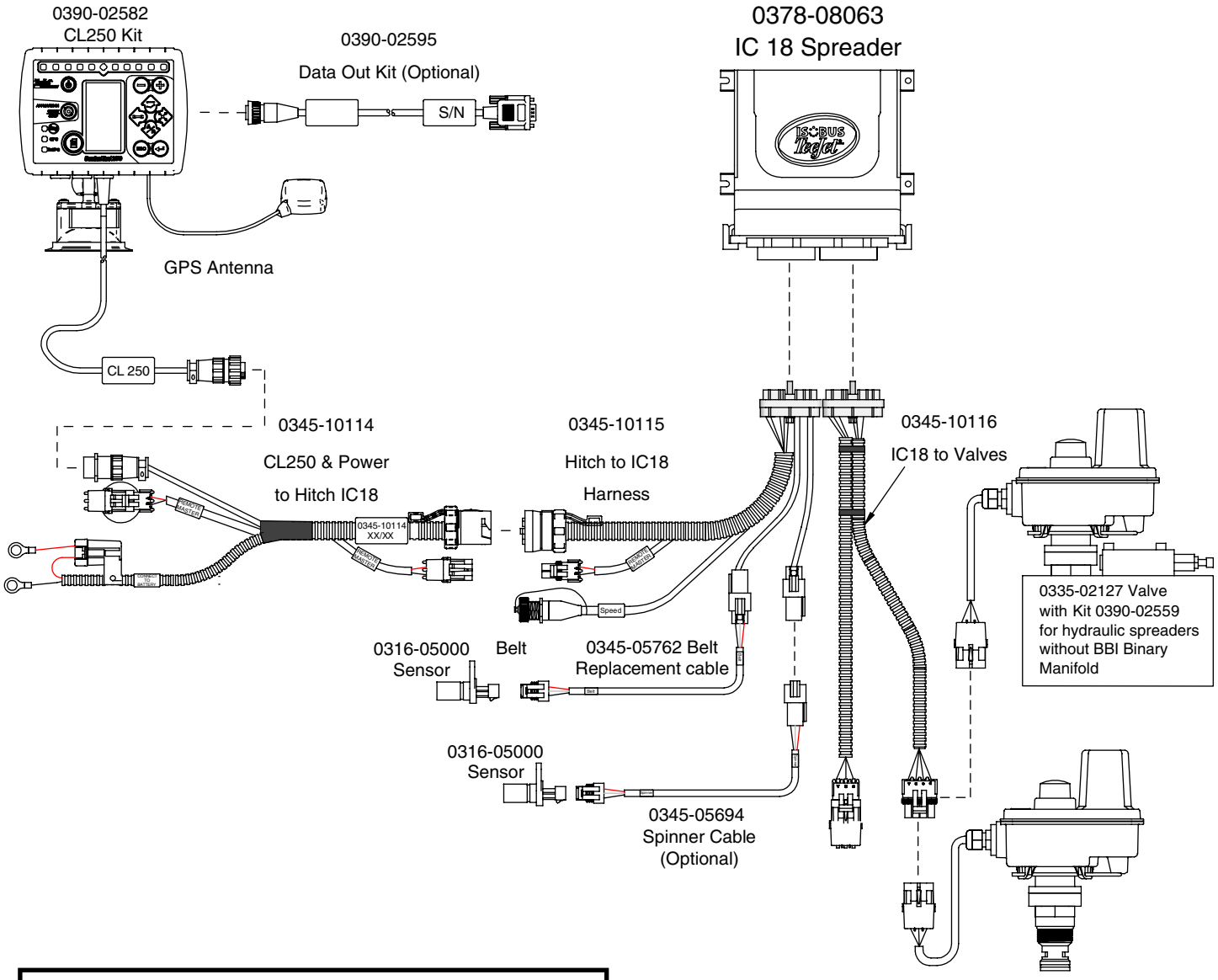

ENDURANCE IC-18
CONSTANT NUMBERS

6 Tooth 88K	55
8 Tooth 667X	48

CONTROLS - BINARY VALVE™

BBI's proprietary Binary Manifold™ controls the hydraulic functions of your spreader. The Binary Manifold™ includes modular components for flow control, relief, and monitoring for both spinners and conveyors. A conveyor system pressure gauge has been installed at the factory. This gauge monitors working pressure. Working pressure is the pressure required to do the work and provides no indication of available pressure. The working gauge simply displays the pressure required to do the work. A spinner system pressure gauge may be added. The port is located on the bottom of the manifold.

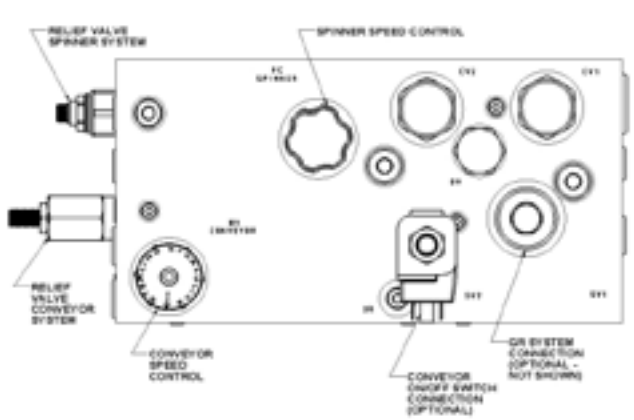

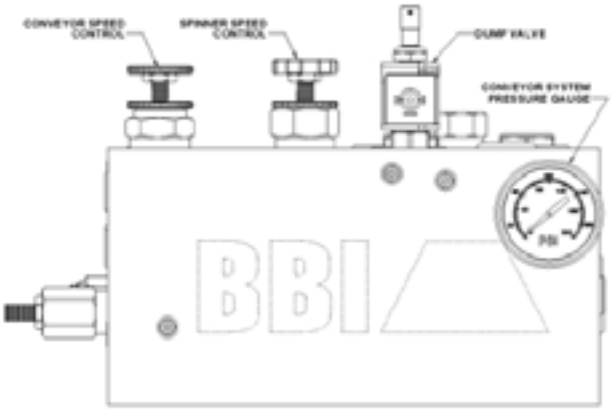

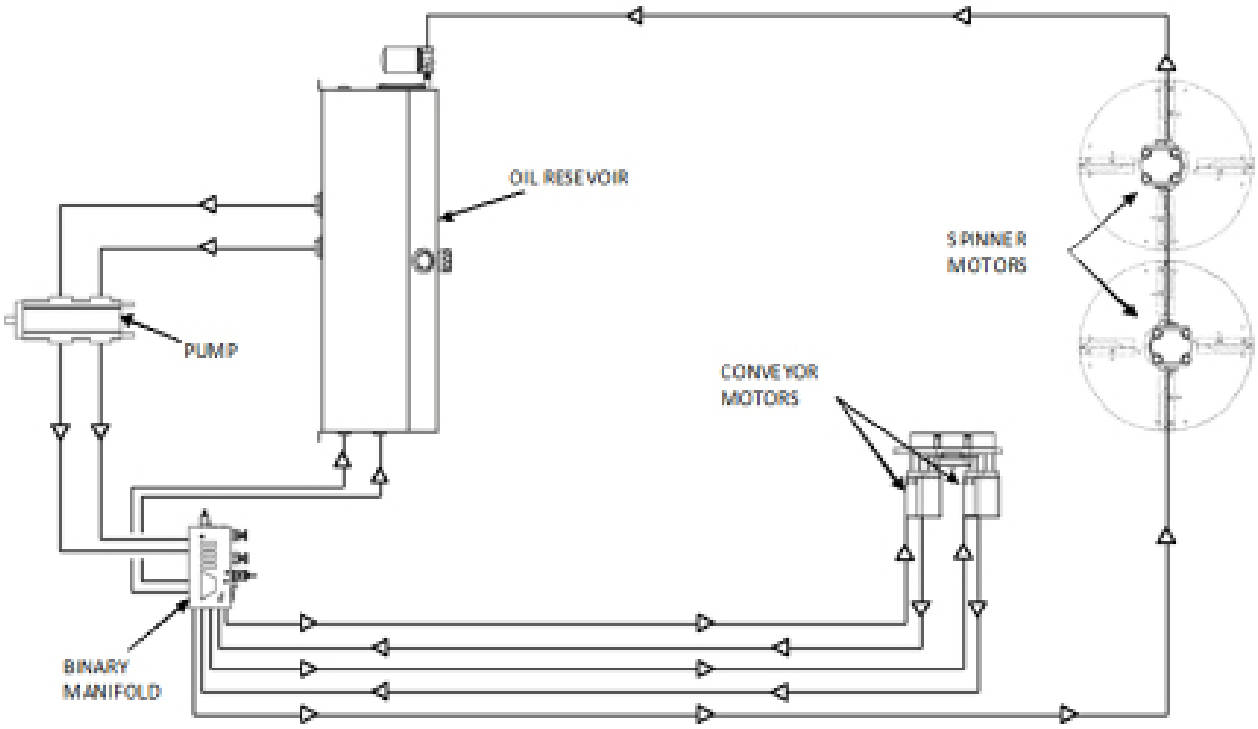

ELIMINATOR MANIFOLD

This is an optional feature found on Tractor Supplied Hydraulics equipped units. The Eliminator Manifold is designed to protect your hydraulic spreader components from harm. It alleviates deadhead, cross hook-up, and over-pressure situations. The hoses can be hooked up backwards, or the return not plugged in, and the Eliminator should protect the motors from harm. It contains flow control, pressure relief, and a spinner system pressure gauge. This gauge monitors working pressure. Working pressure is the pressure required to do the work and provides no indication of available pressure.

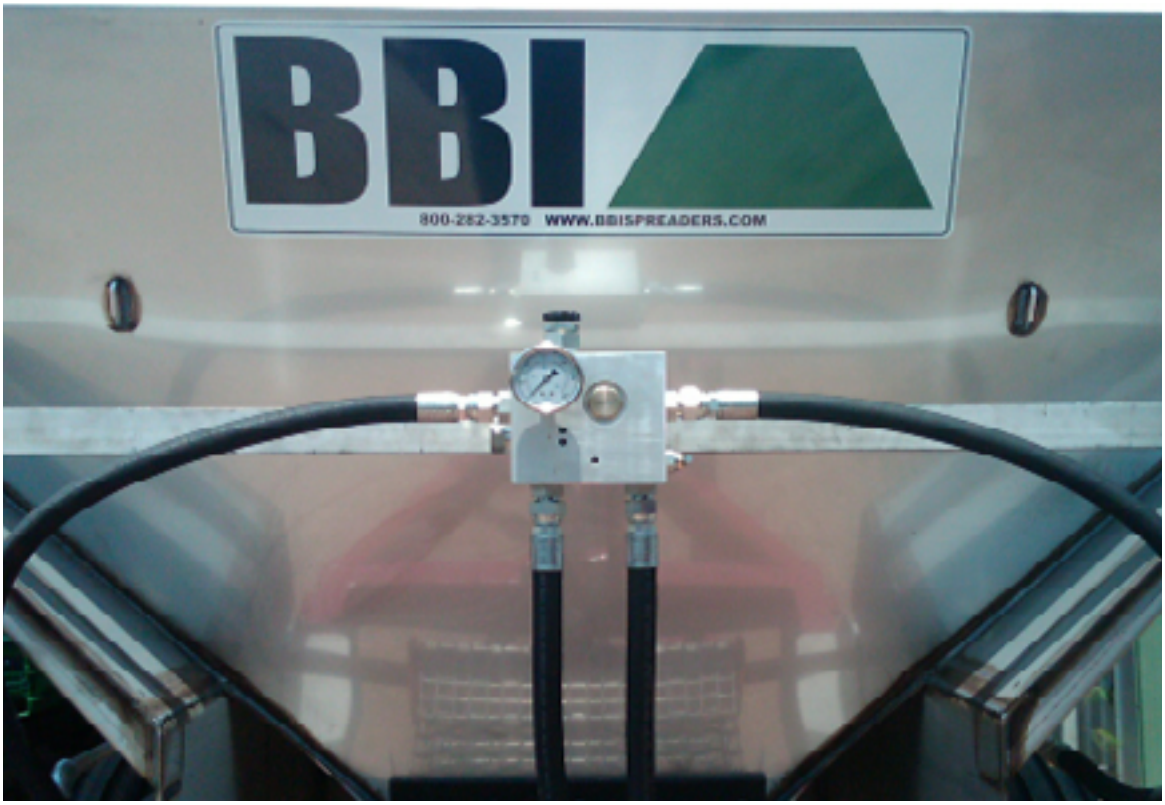

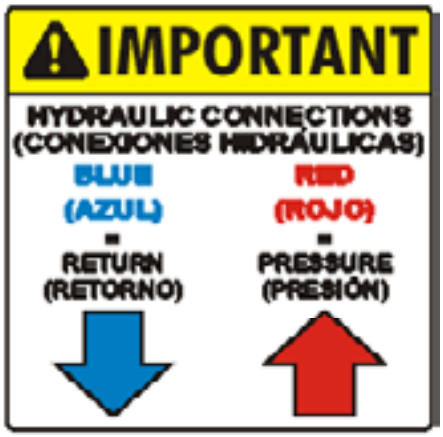

All Tractor-Supplied Hydraulic Systems include the Hydraulic Connections label. This indicates that the blue hose is for Return and the red hose is for Pressure.

MANUAL OPERATION SYSTEM

Bed chain and spinner speed adjustments are performed by adjusting the manual flow control valves located in the binary manifold. There is no precision without electronic controls however. Please reference the rate chart in the machine operation portion of this manual for additional information regarding manual rate setting.

SPINNER SPEED - MANUAL FLOW CONTROL

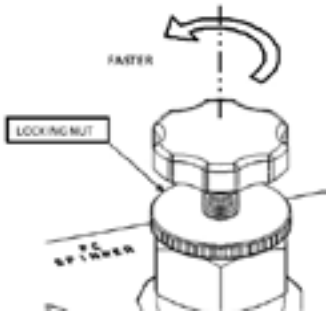

The spinner speed control has a manually adjustable knob with a locking nut. Use the dial to set the speed of the spinners and the locking nut to secure it in place.

To learn more about spinner speed during an application please refer to the Adjustments section of this manual.

CONVEYOR SPEED - MANUAL FLOW CONTROL

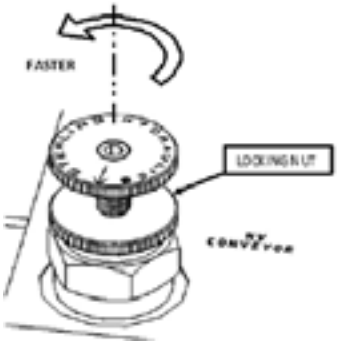

The conveyor speed control has a manually adjustable knob with a locking nut. Use the dial to set the speed of the conveyor and the locking nut to secure it in place.

Please refer to the Adjustments section of this manual.

If your system is electronically controlled, your manual flow control valve will be replaced with a servo.

DUAL SWITCH BOX

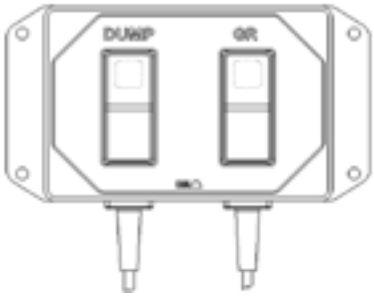

A dual switch box with lighted rocker switches is included with your new spreader. These switches are used to control the Dump Valve and the optional GR System.

NOTE: The the spreader will function normally without the dual switch box.

ON / OFF DUMP VALVE

You should use the dual switch box to temporarily turn the conveyor ON/OFF while the spreader is loaded and in operation.

The dump valve switch sends power (12V) to the solenoid valve, causing the conveyor to stop.

If you have installed an electronic controller for rate control, you will use the rate controller, and not the dump valve, to stop the conveyor.

NOTE: Even with the Dump Valve ON, the conveyor could still slowly creep when not loaded with material. Disengage the PTO to completely shut off power to the conveyor.

HY-TORQUE MANIFOLD

The Hy-Torque Manifold and GR Valve are options which add additional capability. These valves are not included on all Endurance units.

The optional Hy-Torque Manifold provides twice the torque capability for the spinner system.

In situations where the pattern for swath is adversely affected by high speed, rate and weight combinations, engage the Hy-Torque Manifold to produce consistent results.

You can engage the Hy-Torque Manifold manually by turning the handle at the top of the manifold.

GR VALVE

The GR valve is a valve designed to double the available conveyor chain speed. A GR valve can be used in either manual or electronically controlled system. The GR valve operates independently of the electronic controller. The rate controller modulates the chain speed.

The GR valve allows a much wider range of speed and torque options controlled by the operator.

It is generally better to start application in the Normal setting, then use the High setting to achieve desired rates when needed while in progress. When your controller alerts that you are unable to achieve the desired rate, that is the optimal time to switch into the High setting, which allows greater chain speed, settling the conveyor. The GR valve always doubles the available chain speed.

FIELD TEST

Prior to first use of the machine for each spreading season, as well as following any major repair or overhaul, you should field test your machine to verify that all systems and components are functioning properly. You should execute field testing on any suitable course that will allow the spreader to be driven at similar speeds used during spreading.

CAUTION!

To observe conveyor and spinners while the vehicle is in motion, you must take proper safety precautions. These safety precautions may include use of mirrors clamped to permit safe observation, following the spreader in another vehicle at a safe distance, or other suitable means. *DO NOT stand in the hopper or on any part of the spreader, as there is danger of falling off the vehicle or into moving machinery. Use great care while performing this test.*

SPREAD PATTERN

Always test and calibrate the spreader prior to operating in the field. BBI will not be liable for misapplication due to an uncalibrated spreader.

Endurance spreaders are capable of accurately broadcasting a consistent, flat pattern.

FACTORS AFFECTING THE SPREAD PATTERN

Many of the following conditions may affect your equipment's spread pattern performance:

1. Flow divider position
2. Spinner blade position
3. Spinner speed
4. The condition of the spinner blades on the spinner discs
5. Physical properties of material
   a. Density
   b. Size
6. Rate of delivery of material
7. Balance between deliveries to both spinners
8. Wind

Because most of these characteristics will change with each material spread, a certain amount of your own experience with both equipment and material, along with some testing on your part, will determine the adjustments needed to obtain the desired swath width and spread rate.

MATERIAL SIZE AND DENSITY

The material size is one aspect that determines the maximum spread pattern width.

The density of the material also affects the pattern. The spreader will throw large, dense materials farther than finer materials with lower density.

ADJUSTMENTS

You can change the spread pattern by adjusting the flow divider, spinner fins, and spinner speed. In the initial calibration tests make the first adjustments to the flow divider. If the flow divider adjustments do not produce the desired spread pattern, then you may need to adjust the spinner speed or fins.

FLOW DIVIDER

Adjust the flow divider forward to increase the amount of material being applied directly behind the spreader. Adjust the flow divider toward the rear to throw more material to the sides of the spreader. Moving the flow divider will not make the spread pattern wider—it will only change the distribution of material within the pattern.

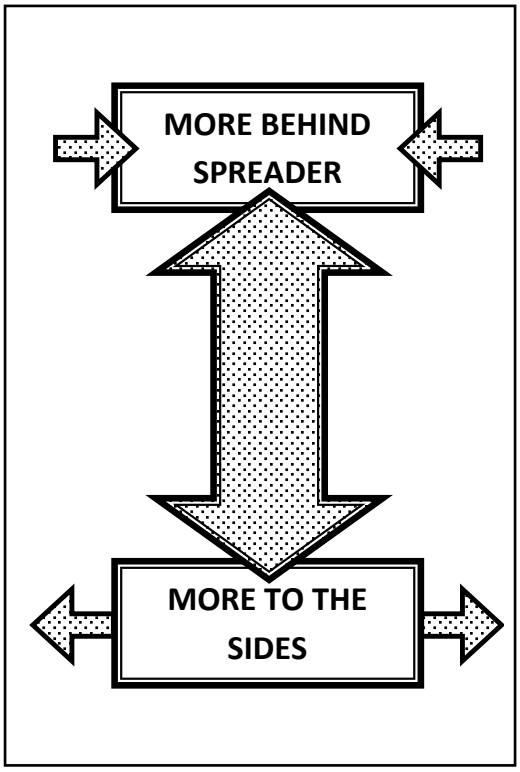

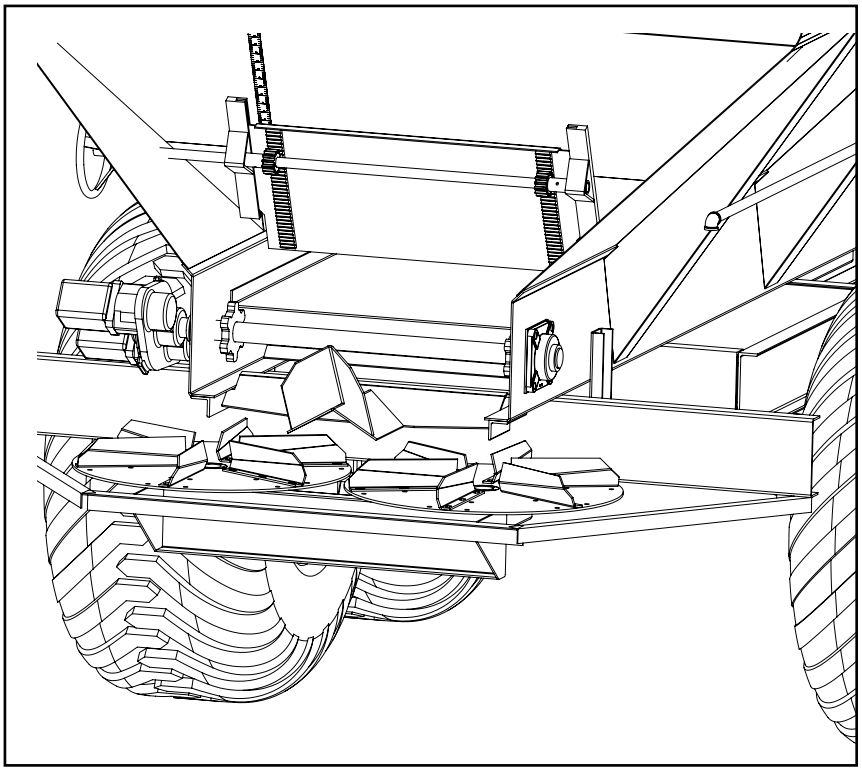

Materials need customer-specific adaptation to suit regional variations. Please be sure to adjust your flow divider when you need to optimize a spread pattern.

SPINNER SPEED

Due to the inconsistency of organic materials, it is difficult to predict the effects of spinner speed adjustments. Your in-field experience with these products is important to help determine optimum spinner speed.

SPINNER FINS

- You can adjust the spinner fins to three different positions: straight, forward, and backward
- Moving the fins **forward** causes more material to be thrown to the sides of the spreader
- Placing the fins in the **back** position causes more material to be thrown directly behind the spreader

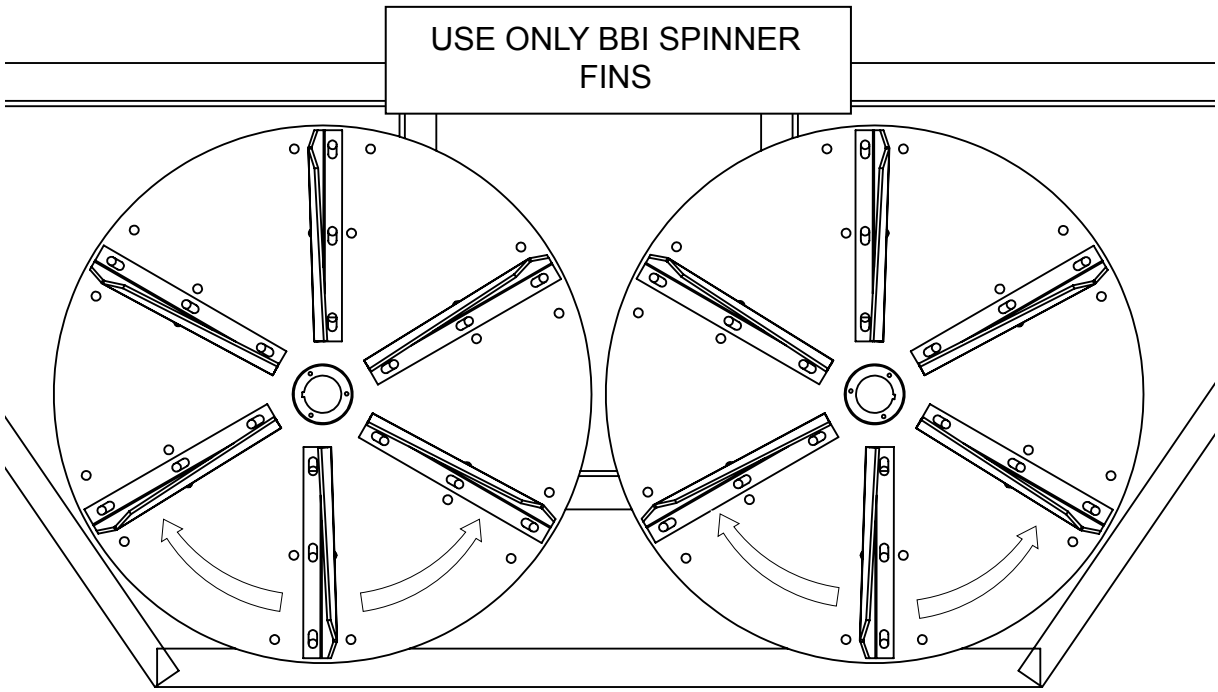

Spinner fins will wear and disfigure from the abrasiveness of the materials. Excessive wear can cause an uneven spread pattern. You should replace worn fins before they affect the spread pattern (fins are available for purchase from your nearest BBI dealer or through the parts department at BBI)

FINS		
PART NO.	**DESCRIPTION**	**QTY**
51CL 11- RH	11” Fin - Right Hand	6
51CL 11- LH	11” Fin - Left Hand	6

APPLICATION RATE - PRINCIPLES AND GENERAL INFORMATION

Always test and calibrate your spreader prior to operating in the field.

The amount of material being applied is controlled by the speed of the bed chain, height of the gate opening, product density (weight), ground speed and swath width. A change to any one of these variables will result in a different application rate. For example, if nothing else changes except the swath width, then the narrower the swath the heavier the rate. More application rate principles and relationships can be found at the bottom of this page.

ELECTRONIC CONTROLS

An electronic rate control system with guidance is the only way to achieve precision application rates. Refer to the controller manual for more information. You can also call your servicing dealer and video tutorials are available on the **FAQ Section of the website**: http://bbispreadernews.com/faq/product-operation-questions/how-do-i-set-up-and-use-my-cl-250-with-my-bbi-spreader.html

MANUAL CONTROL

With some limitations, you can achieve relatively accurate application rates using the manual controls. **You must maintain a constant ground speed, because no direct relation exists between the conveyor speed and the ground speed.** The speed of the conveyor chain will not vary with ground speed unless you use an electronic rate controller. Therefore, if ground speed changes, then the application rate also

Use the instructions below to adjust your spreader for the desired application rate. You will reference the chart on page 22 for gate settings based on this rate. NOTE: **A rate chart is recommended to be used only as a guide in the calibration process. The operator is responsible for spreader calibration and the actual amount of material applied.**

1. Determine Density-then locate at bottom of chart (Weigh 5 Gallons of Material and multiply x 1.5)
2. Move vertically up chart to find desired rate
3. Move left to locate gate setting
4. Adjust gate setting based on your swath (Increase or decrease gate based on your swath)
5. Set Rear Roller RPM (ground speed (MPH) x 2.5)
6. Run Calibration Load. Adjust Gate if Necessary

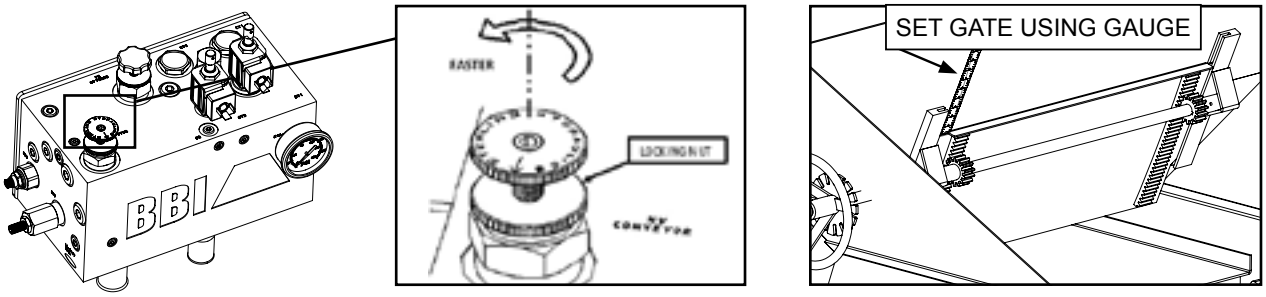

Set Rear Roller RPM using flow control valve.

When adjusting application rates, keep these principles in mind:

- Bed chain increases = Rate increases
- Gate height increases = Rate increases
- Swath width increases = Rate decreases
- Material density increases = Rate increases
- Travel speed increases = Rate decreases

Endurance Pull-Type

88k Bar Chain

40 Ft. Swath

Estimated Material Applied Per Acre

Gate Setting												
14	2640	3300	3960	4621	5281	5941	6601	7921	9241	10561	11881	13202
13	2452	3065	3678	4291	4903	5516	6129	7355	8581	9807	11033	12259
12	2263	2829	3395	3960	4526	5092	5658	6789	7921	9053	10184	11316
11	2075	2593	3112	3630	4149	4668	5186	6224	7261	8298	9335	10373
10	1886	2357	2829	3300	3772	4243	4715	5658	6601	7544	8487	9430
9.5	1792	2240	2687	3135	3583	4031	4479	5375	6271	7167	8062	8958
9	1697	2122	2546	2970	3395	3819	4243	5092	5941	6789	7638	8487
8.5	1603	2004	2405	2805	3206	3607	4008	4809	5611	6412	7214	8015
8	1509	1886	2263	2640	3018	3395	3772	4526	5281	6035	6789	7544
7.5	1414	1768	2122	2475	2829	3183	3536	4243	4951	5658	6365	7072
7	1320	1650	1980	2310	2640	2970	3300	3960	4621	5281	5941	6601
6.5	1226	1532	1839	2145	2452	2758	3065	3678	4291	4903	5516	6129
6	1132	1414	1697	1980	2263	2546	2829	3395	3960	4526	5092	5658
5.5	1037	1297	1556	1815	2075	2334	2593	3112	3630	4149	4668	5186
5	943	1179	1414	1650	1886	2122	2357	2829	3300	3772	4243	4715
4.5	849	1061	1273	1485	1697	1910	2122	2546	2970	3395	3819	4243
4	754	943	1132	1320	1509	1697	1886	2263	2640	3018	3395	3772
	20	**25**	**30**	**35**	**40**	**45**	**50**	**60**	**70**	**80**	**90**	**100**

Material Weight per Cubic Foot (DENSITY)

1). Determine Density - then locate at bottom of chart (Weight 5 Gallons of Material and multiply x 1.5)
2). Move Vertically up chart to find desired rate
3). Move left to locate gate setting
4). Adjust gate setting based on your swath (Increase or decrease gate based on your swath)
5). Set Rear Roller RPM (ground speed (MPH) x 2.5)
Example: 6 MPH x 2.5 = 15 Rear Roller RPM
6). Run Calibration Load. Adjust Gate if Necessary

If you **Decrease** Swath Width to:
- 35 ft. **Lower** Gate 12.5%
- 30 ft. **Lower** Gate 25%
- 25 ft. **Lower** Gate 37.5%

If you **Increase** Swath Width to:
- 45 ft. **Raise** Gate 12.5%
- 50 ft. **Raise** Gate 25%

NOTE: Chart Calculations Based on 40 ft. Swath

TIP: This approximately translates to: every 5 foot decrease / increase in swath = 1.5” lower / higher gate setting

MAINTENANCE

It is important that a preventative maintenance program be established. The cleaning, lubrication, and maintenance practices that you follow will affect the life, service, and overall cost-of-use of the spreader.

LUBRICATION

Frequently lubricate all bearings and other grease points to extend the life of the components. When lubricating, it is important to also inspect the components to ensure satisfactory operation.
The required interval of lubricating will depend on the operating environment. Conditions such as dust, moisture, speed, and temperature will affect how often to lubricate. Refer to the chart below for a guideline.

LUBRICATION SCHEDULE

ITEM	FREQUENCY
Input Shaft U-Joint	40 hours
Input Shaft Bearing	40 hours
Front Roller Bearings	120 hours
Rear Roller Bearings	40 hours
Gate Rod	500 hours
Wheel Hubs	40 hours
Walking Beam Suspension	**

Walking Beam Suspensions have grease points in the bushings along the pivot pin. Due to the suspension's design, you do **not have to lubricate the bushings (BBI has included fittings on these bushings for additional lubrication).

Note: BBI has filled Gearboxes with **90-weight oil** at the factory. You should replace the factory oil after the first 50 hours of break-in time. Thereafter, you should drain and refill the oil after every season.

REAR ROLLER BEARING PLATES

You'll find the UHMW Polyethylene plates located behind the rear roller bearings. With the addition of this plate, a cavity has been created that is filled with grease which will help purge any debris that might cause damage or corrosion. Grease these bearings every 40 hours of operation for protection.

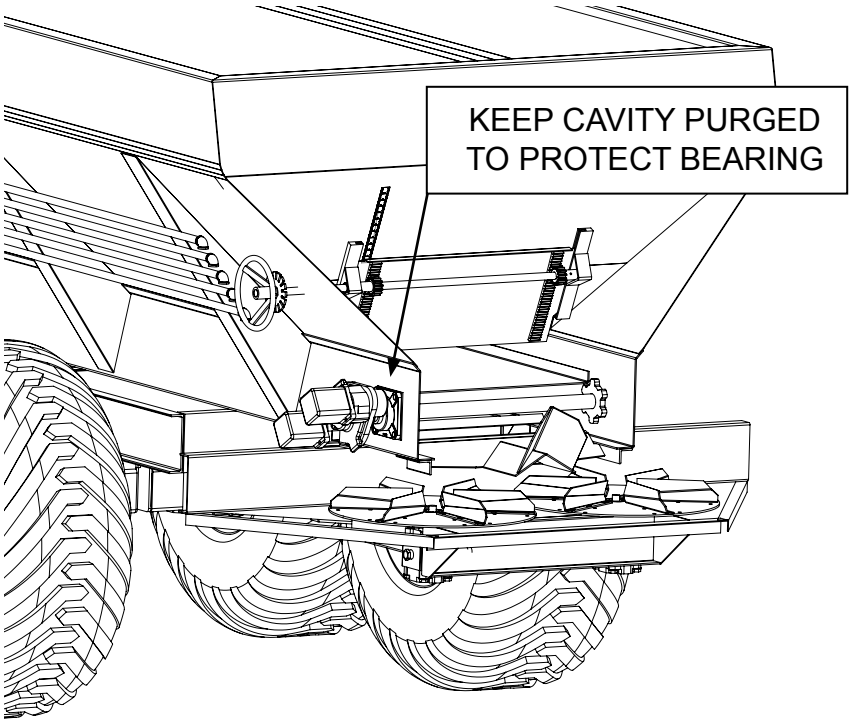

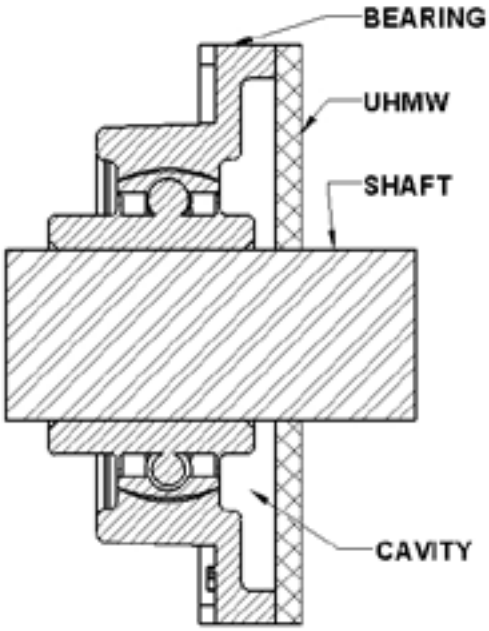

FASTENERS

Tighten all screw fasteners after the first week of operation and annually thereafter. Replace any lost or damaged fasteners or other parts immediately upon finding such damage or loss.

LUG NUTS

Check lug nuts each time before using. Ensure lug nuts are tightened to the appropriate torque specification. For solid flat plate center wheels with 10-bolt hubs, tighten lug nuts to 250 ft/lbs. For 8-bolt hubs, tighten lug nuts to 120 ft/lbs. For 6-bolt hubs, tighten lug nuts to 120 ft/lbs.

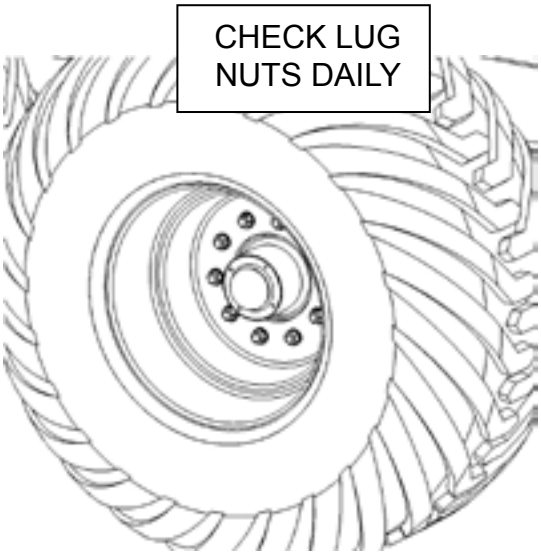

IMPORTANT! **Tightening lug nuts more than recommended can damage wheels.**

CHAIN TENSION

Conveyor chain tension is also a factor in conveyor and roller life. Note the proper chain tension illustrated below. Be sure the chain is tensioned equally on both sides. You can make adjustments on each side of the unit at the idler bearings located at the front of the unit.

A conveyor chain that is too tight will stretch more than normal and can also cause the roller shafts to break. If the chain is too loose then it can catch on the sub frame or get wrapped around the rear roller causing damage to the chain, roller, and hopper.

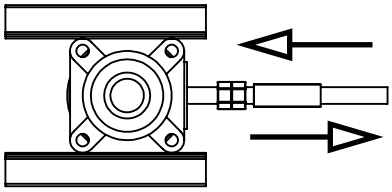

Front Roller Adjustment used to change chain tension.

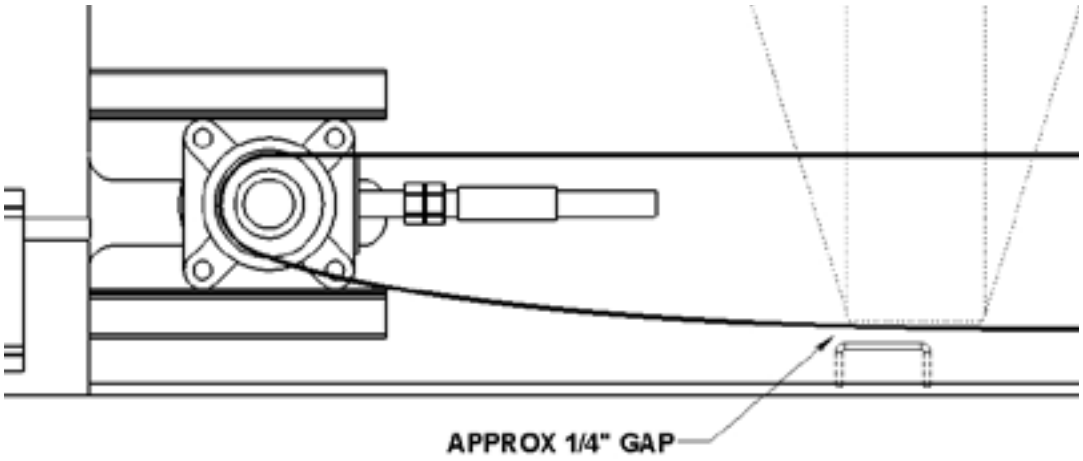

IMPORTANT!

Note: Chain will stretch when first used. *You must check the chain for appropriate tension and properly adjust it to avoid damaging unit.* **After initial break-in period, stretching should be minimal.**

CONVEYOR TENSION ADJUSTMENT

When adjusting the conveyor chain, allow the bottom side of the conveyor to touch the cross members of the chassis inside the conveyor return tunnel.

NOTE: Conveyor Chain will stretch when first used. Chain must be checked for appropri ate tension and properly adjusted to avoid damaging unit. After initial break in period stretching should be minimal.

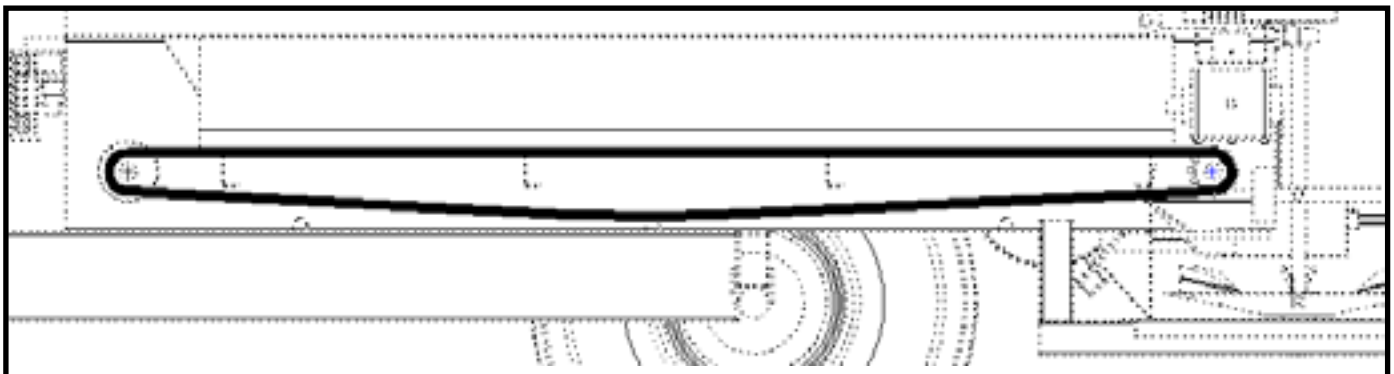

OPTIMUM CHAIN TENSION

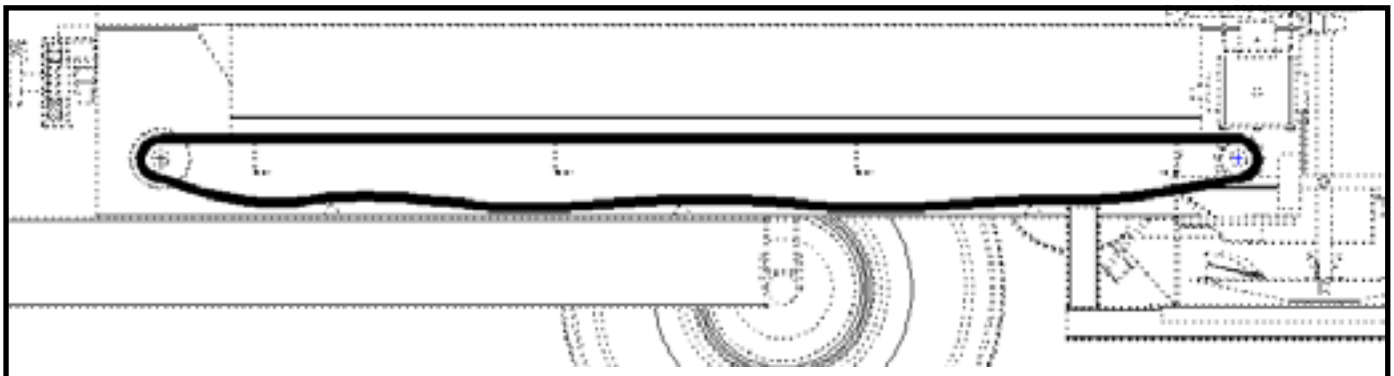

CHAIN TENSION IS TOO LOOSE

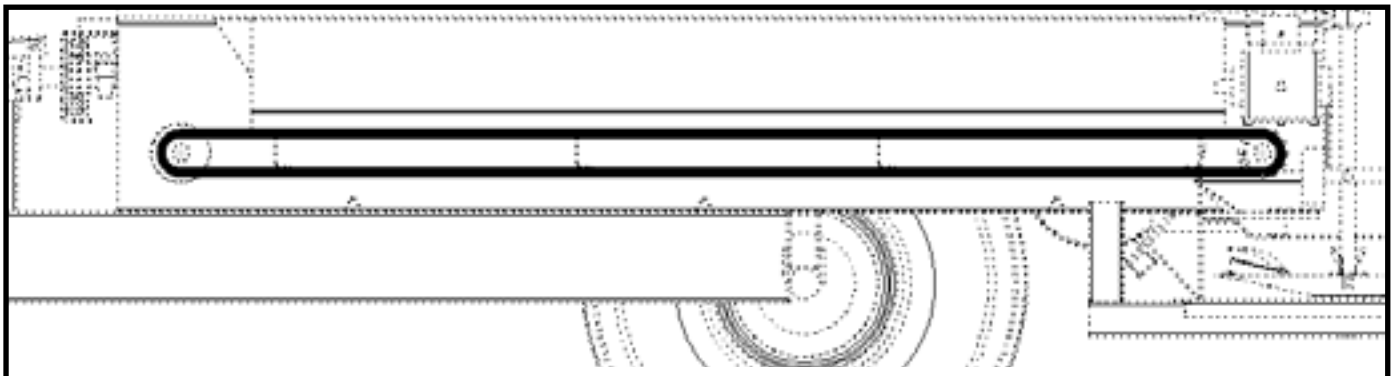

CHAIN TENSION IS TOO TIGHT

HYDRAULIC SYSTEM

WARNING!

DO NOT check for leaks while system is operating, as high-pressure oil leaks can be dangerous!
DO NOT check for leaks adjacent to moving parts while system is operating, as there may be danger of entanglement.

HYDRAULIC FLUID

In general, use any good-quality 30-weight hydraulic oil. More specifically, you should use premium-quality hydraulic oil with a viscosity range of 150-300 SUS at 100°F. Normal operating viscosity range is between 80-1000 SUS. Maximum start up viscosity should not exceed 4000 SUS. Oil should have maximum anti-wear properties, rust and oxidation inhibitors.

Check the hydraulic fluid level before every use. The system holds approximately 35-40 gallons of fluid. A sight gauge located on the reservoir will indicate the fluid level. Fluid should fill at least three-quarters of the way up the gauge.

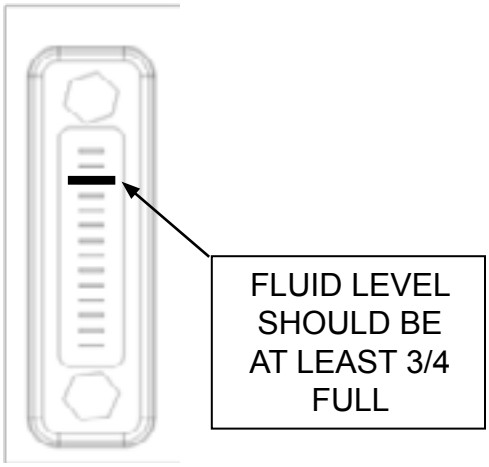

FILTERS

Change the filter after the first 50 hours of initial use, and then every 500 operating hours.

HYDRAULIC DIAGRAM

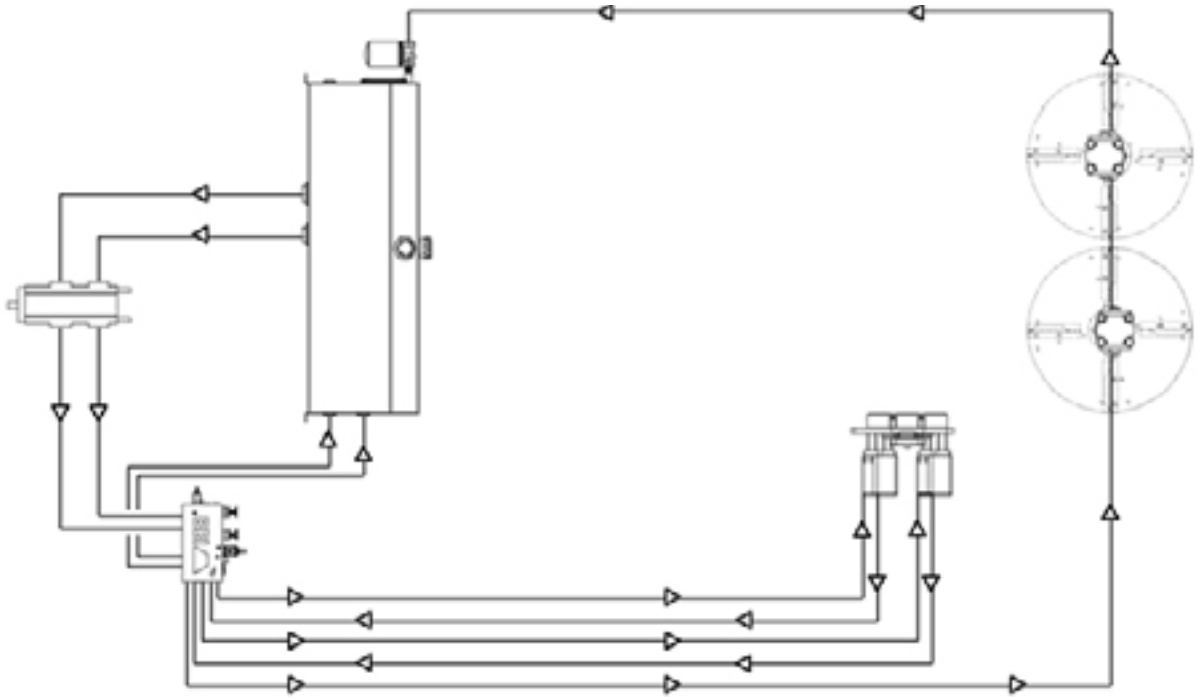

TIPS & TRICKS

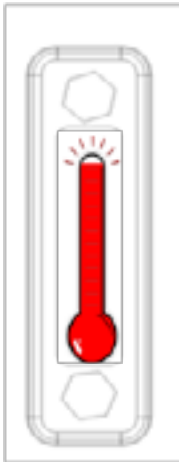

FLUID TEMPERATURE

Under normal operating conditions, the temperature of the hydraulic oil should be approximately 135-165°F.

For no reason should the oil temperature be above 185°F.

Overheated oil can cause damage to the hydraulic system, shortening the life of pumps, motors, and other components.

OVERLOADING

IMPORTANT!

Be aware of the capacity of the hopper compared to the hydraulic system and suspension. It may be possible to overload the spreader with a heavy material. Overloading can cause many different problems with the spreader such as suspension damage, overheated hydraulic fluid, excessive conveyor chain stretching, and structural damage to the hopper.

IN CASE YOU EVER NEED TO REMOVE THE CONVEYOR GEAR CASE

You must remove a bolt keeping the gear case from moving prior to taking the gear case off the rear roller shaft. There is nothing else holding the gear case to the shaft except for this single bolt.

If the gear case is difficult to remove, then the key inside the gear case may have deformed due to excessive torque. You can split the gear case housing to access the inside.

After service, refill gearbox with a high quality 90 weight oil.

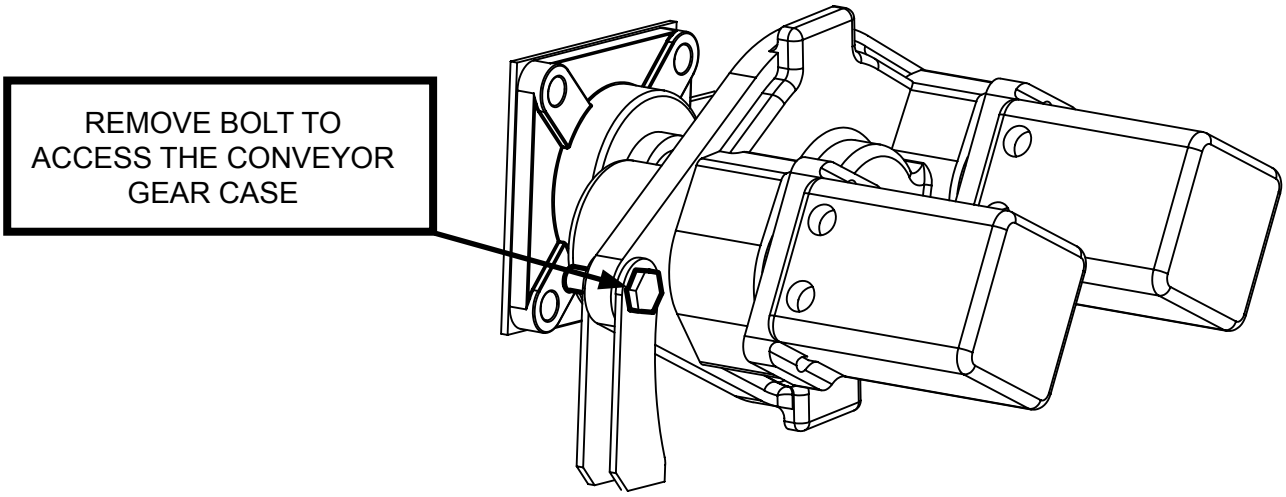

REPLACEMENT PARTS

Use only genuine BBI Parts.

Order parts from the authorized BBI dealer in your area.

When placing an order, please have available:

1. The model and serial number of the spreader.
2. The part name, part number, and the quantity required.
3. The correct street address for parts delivery.

DEALER'S PARTS DEPARTMENT INFORMATION:

Dealer Parts Representative: _____

Phone number: _____

Email: _____

SHIPPING DAMAGE

You must make claims for shortages and/or errors immediately upon receipt of goods from BBI. When you receive broken or damaged goods, you must make a full description of the damage to the carrier agent on the freight bill. If insisted upon, you can always collect full damage from the transportation company. Please contact BBI as soon as possible after you have notified the carrier.

If the transportation company is not handling your claims to your full satisfaction, please contact BBI's Customer Service Department at 1-800-282-3570 for assistance.

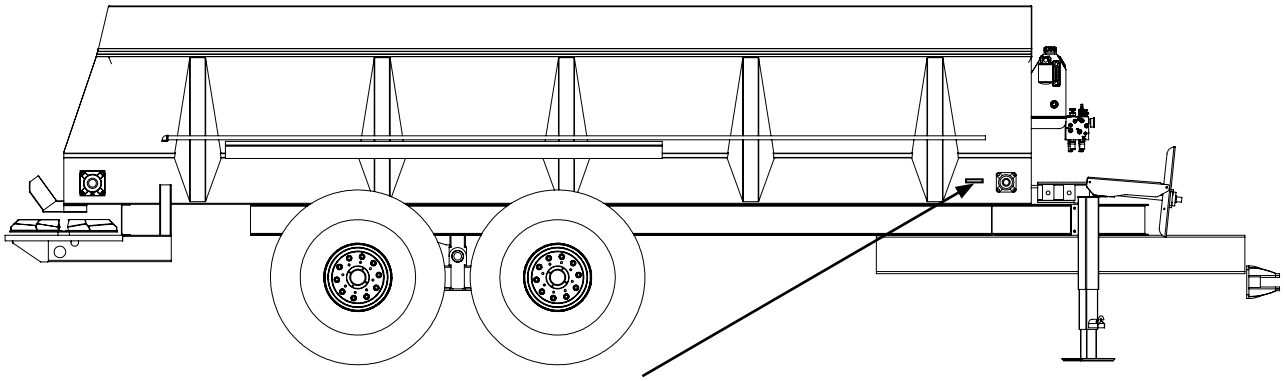

Serial number is located here - it is comprised of 4 digits. Please have this number available when ordering replacement parts.

PARTS INFORMATION

Information contained in this section is provided for identification and reference purposes when ordering replacement parts.

1). Identify the part or component that needs to be replaced.
2). Locate the appropriate section on the following pages where the part is located.
3). Reference the appropriate page to gather necessary part number and pertinent information.

REPLACEMENT PARTS ORDERING:

You have several options when ordering replacement parts:

1) Call your service dealer
2) Order through BBI's parts website: www.bbispreaders.com
3) Call BBI parts department: 800-282-3570 ext. 234

COMPONENT / ASSEMBLY IDENTIFICATION:

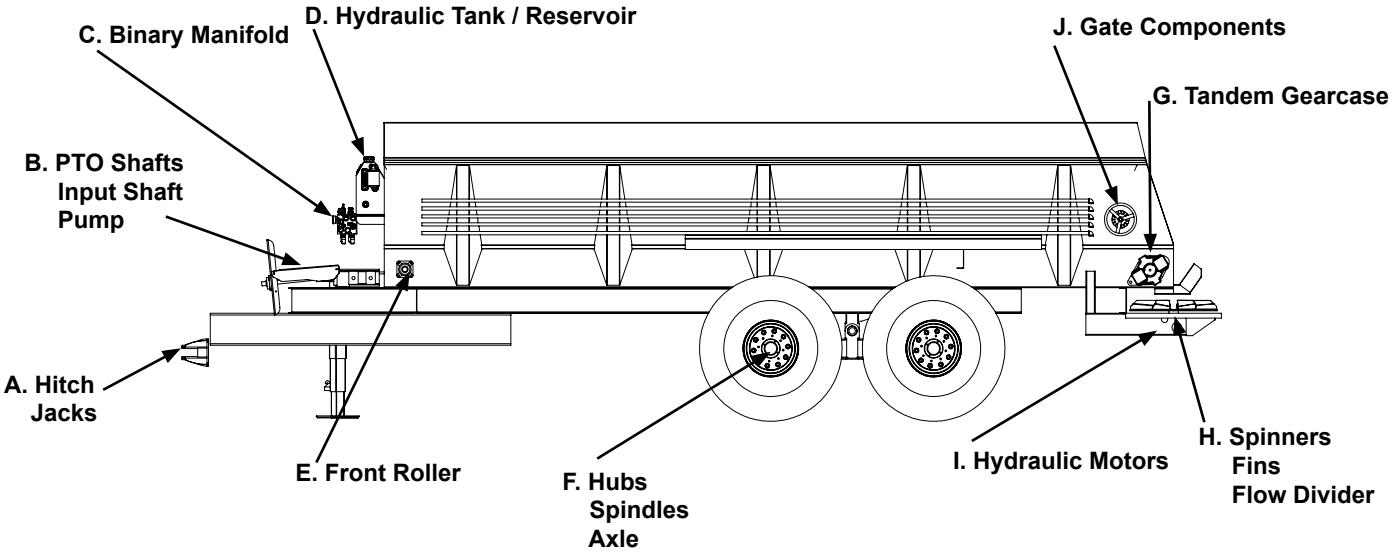

A: HITCH COMPONENTS

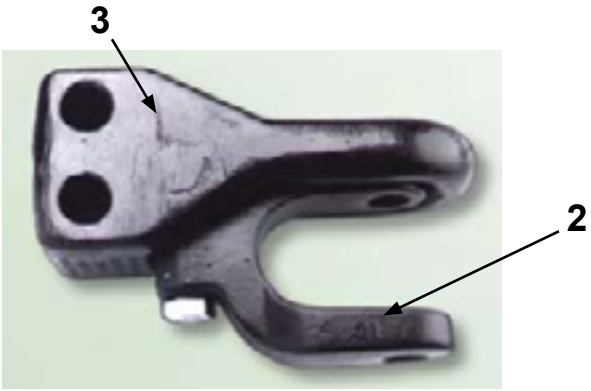

ITEM	PART NO.	DESCRIPTION	QTY
1.	24PPHB305	Hitch Bracket	1
2.	24PPI208VR	Perfect Hitch Clevis	1
3.	24PPI401V3	Perfect Hitch Pintle	1
4.	24PPI401V3A	Perfect Hitch Assembly	1
5.	24H20078	Heavy Duty Hitch	1

ITEM	PART NO.	DESCRIPTION	QTY
1.	24SWL190DL	7K Jack	1
2.	24182304	10K Jack	1

B: PTO SHAFTS, INPUT COMPONENTS, PUMP

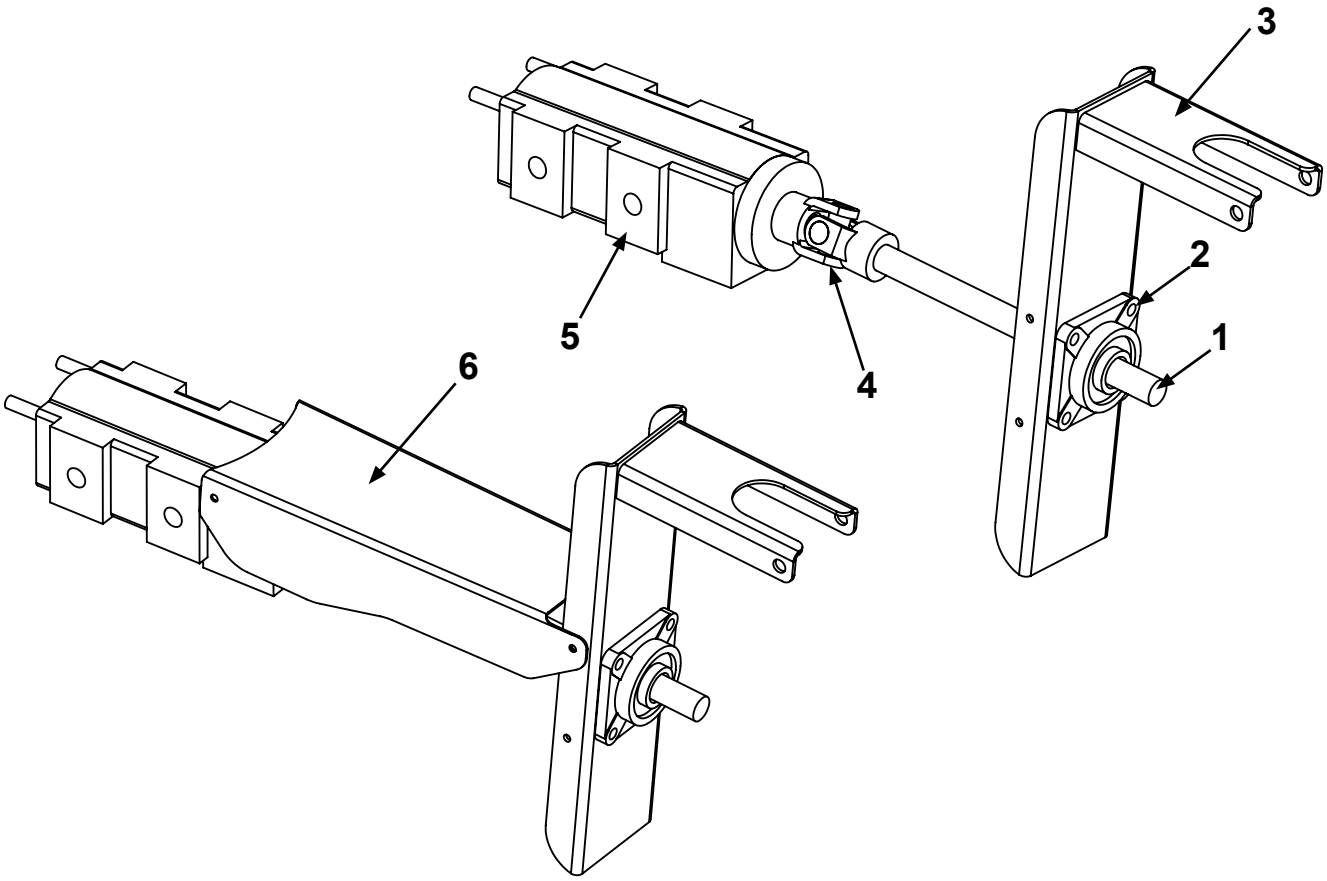

ITEM	PART NO.	DESCRIPTION	QTY
1.	45HS18	18” Hydraulic Input Shaft 1/4 Key	1
2.	60HCFS206-20	1 1/4” Eccentric Roller Bearing	1
3.	15PTO-1-13	PTO Tower	1
4.	616400101500	U-Joint 1 1/4” Round x 1/4” Key x 5/16” Key	1
5.	3025RM2525	Remote Mount Pump *See separate diagram for seals, keys, and gear sets.	1
6.	15PTO-H2A	Shaft Guard	1

ITEM	PART NO.	DESCRIPTION	QTY
7.	64PTOS61000CV20	(Big 1000) 1 3/4” 20 Spline constant velocity PTO shaft	1
8.	64PTOS61000CV21	(Small 1000) 1 3/8” 21 Spline constant velocity PTO shaft	1

C: BINARY MANIFOLD COMPONENTS

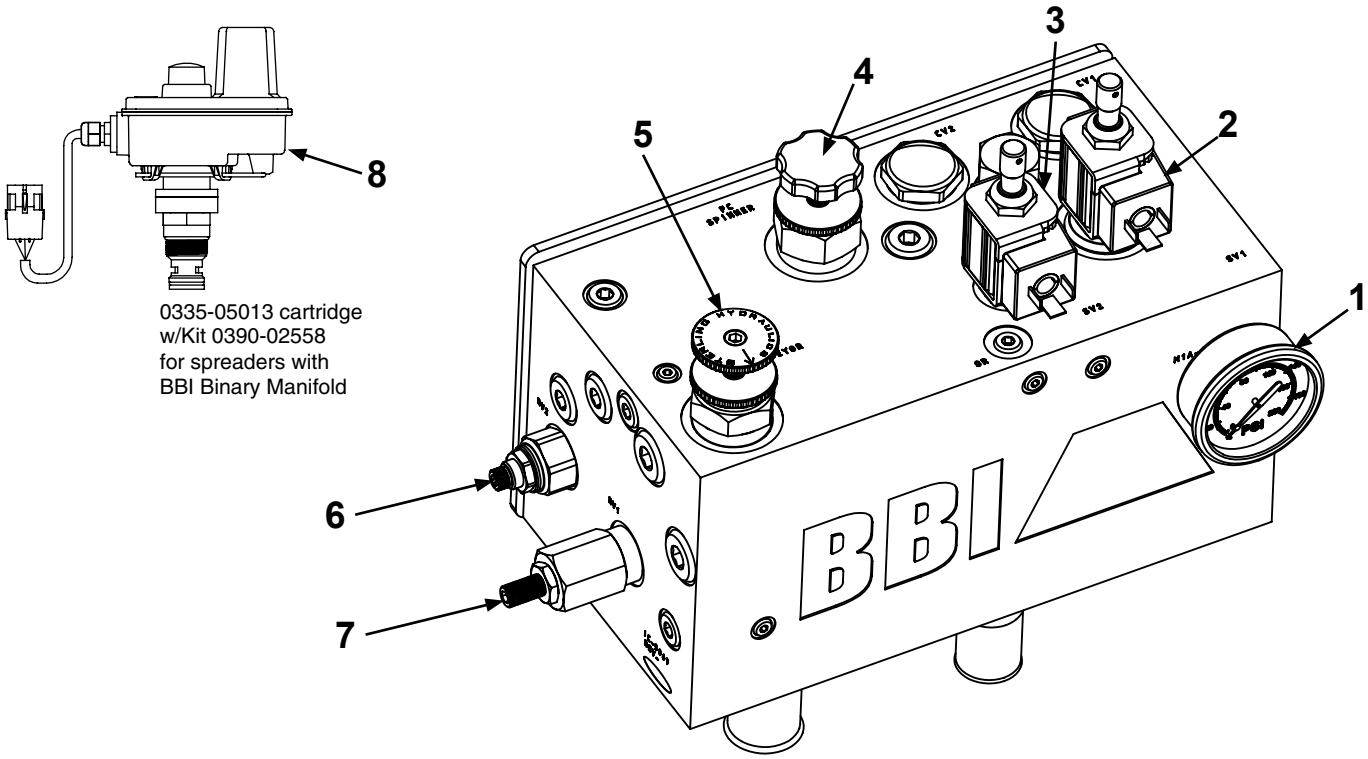

ITEM	PART NO.	DESCRIPTION	QTY
1.	34PDSSIP210B	Pressure Gauge	1
2A.	32GRVCOIL	32 GRV Coil	1
2B.	32GRVCARTRIDGE	32 GRV Cartridge	1
3A.	32ICBVDVS	Dump Coil	1
3B.	32ICBVDVC	Cartridge	1
4.	32JIAI25WN	Spinner Flow Control	1
5.	32J06A2WN	Chain Flow Control	1
6.	32RAH101530	Spinner Relief Valve	1
7.	32A04H3H2N	Conveyor Relief Valve	1
8.	033505013	Servo Valve	1

D: HYDRAULIC RESERVOIR COMPONENTS

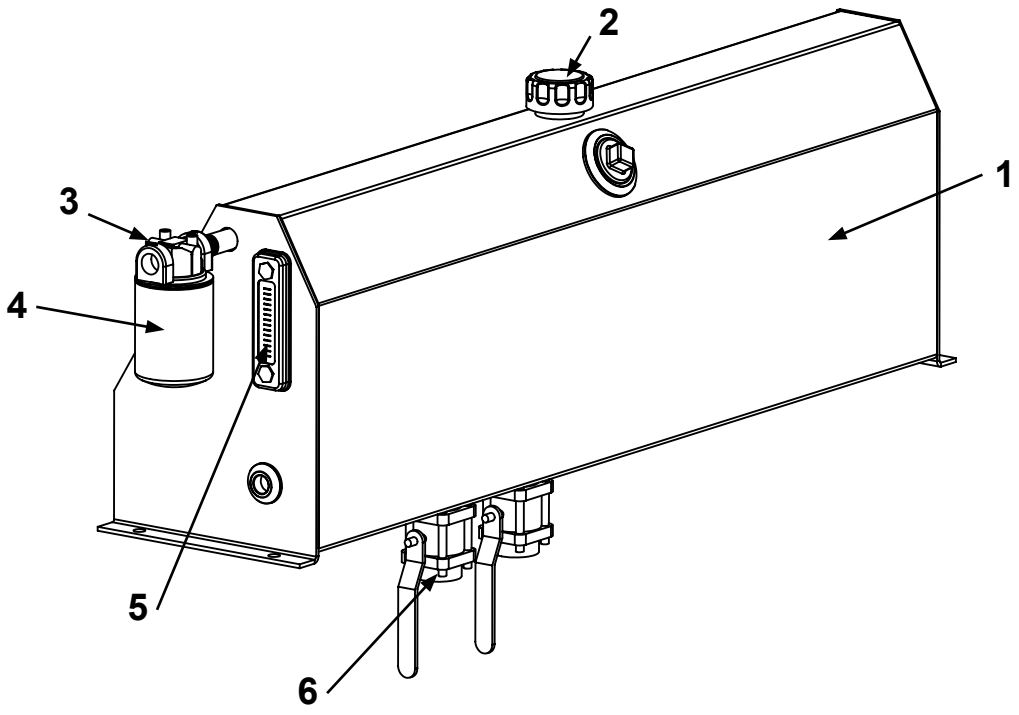

ITEM	PART NO.	DESCRIPTION	QTY
1.	37HTP40	Tank	1
2.	34HC12012A	Breather Cap	1
3.	34707782A	Filter Head	1
4.	34702784A	Filter	1
5.	34HSG-55	Sight Gauge	1
6.	32BV-125	Ball Valve	2

E1: FRONT ROLLER COMPONENTS

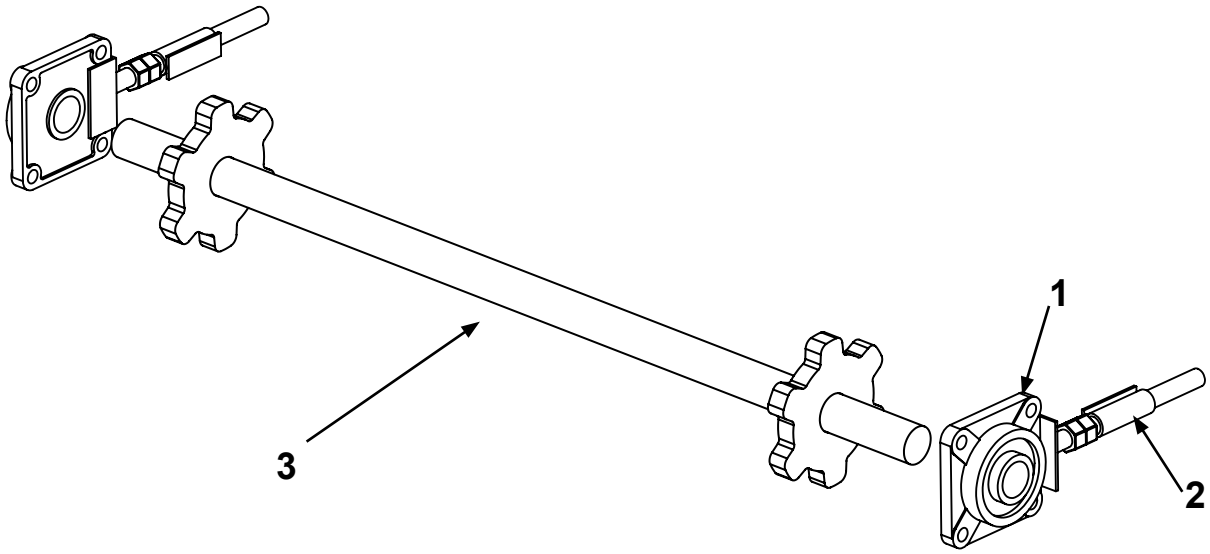

ITEM	PART NO.	DESCRIPTION	QTY
1.	60UCF208-24	1 1/2” 4-Bolt Flange Bearing	2
2A.	42 FRASS	Adjusting Screw (Stainless)	2
2B.	42 FRAZ	Adjusting Screw (Zinc)	2

88K			
ITEM	PART NO.	DESCRIPTION	QTY
3.	42FR6150 88K	6 Tooth 88K	1
	42FR7150 88K	7 Tooth 88K	1
	42FR7200 88K	2” 7 Tooth	1

66 7X			
ITEM	PART NO.	DESCRIPTION	QTY
3.	42FR6150667X	6 Tooth Front Roller	1
	42FR7150667X	8 Tooth Cog	1

E1: FRONT ROLLER COMPONENTS - THIRD RUN OF CHAIN

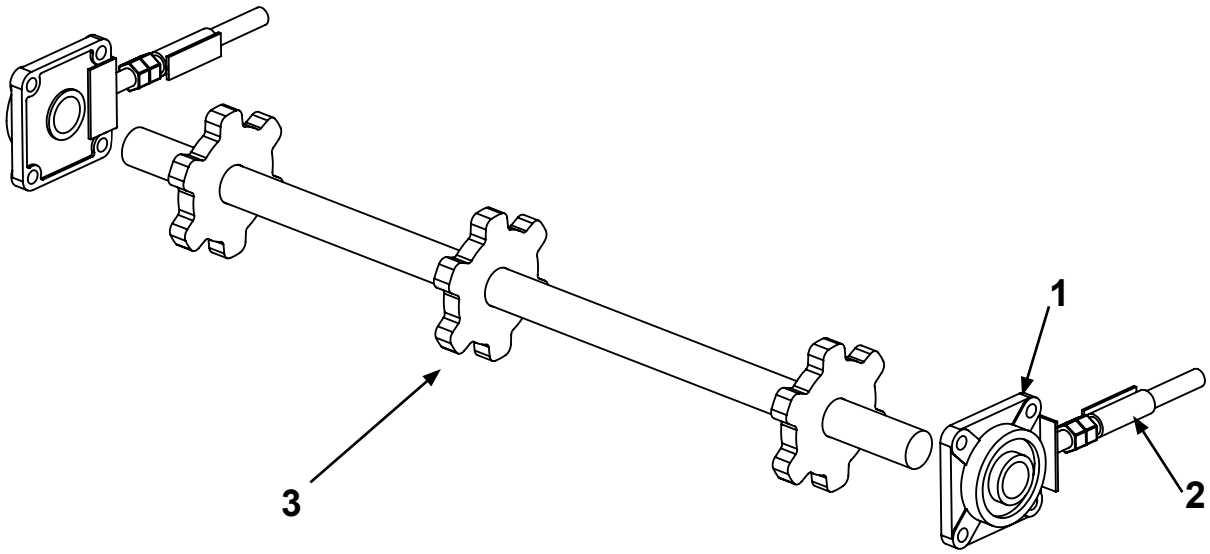

ITEM	PART NO.	DESCRIPTION	QTY
1.	60UCF211-32	2” 4-Bolt Flange Bearing	2
2A.	42 FRASS	Adjusting Screw (Stainless)	2
2B.	42 FRAZ	Adjusting Screw (Zinc)	2
3.	42FR6150 88K3R	3 Sprocket Front Roller	1

E2: REAR ROLLER COMPONENTS

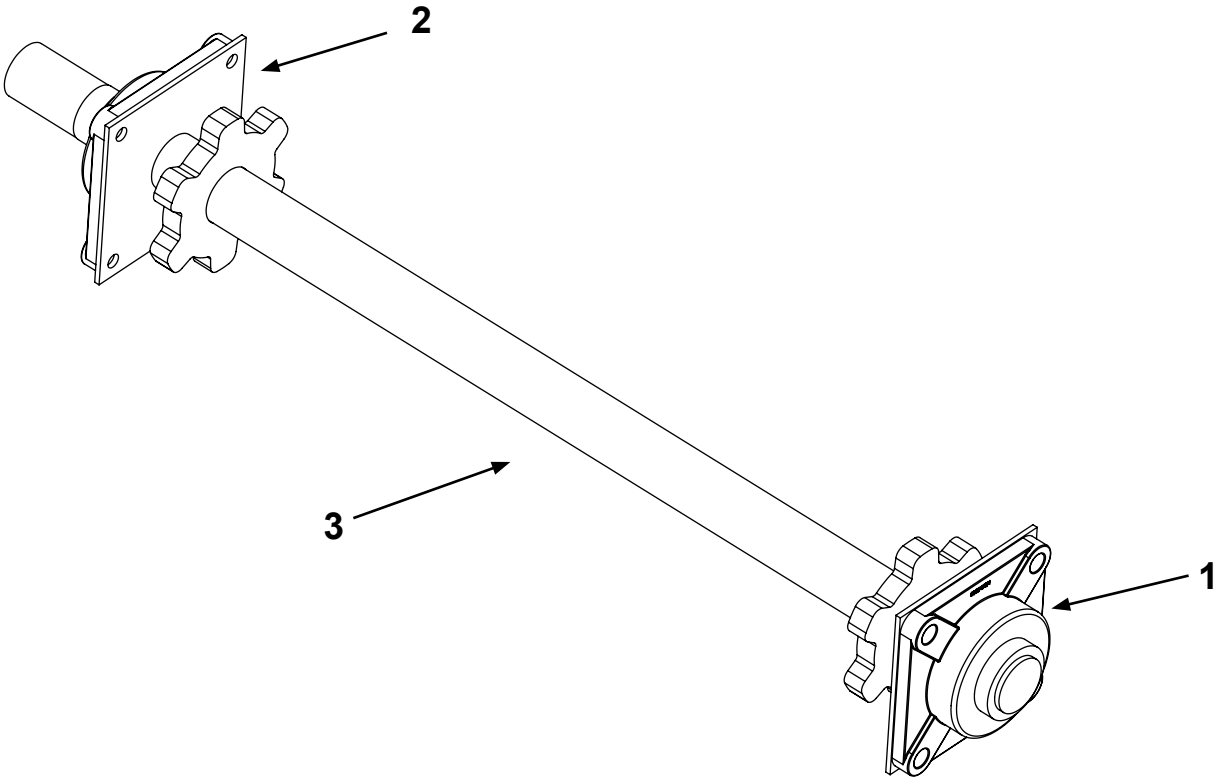

ITEM	PART NO.	DESCRIPTION	QTY
1.	60UCF211-32	2” Flange Bearing	2
2.	89 POLYSQUARES	Poly Squares 6.5 x 6.5	2

667X			
ITEM	PART NO.	DESCRIPTION	QTY
3.	42RR6200667X	6 Tooth Rear Roller	1
	42RR8200667X	8Tooth Rear Roller	1

88K			
ITEM	PART NO.	DESCRIPTION	QTY
3.	42RR620088K	6 Tooth Rear Roller	1
	42RR720088K	7 Tooth Rear Roller	1

E2: REAR ROLLER COMPONENTS - THIRD RUN OF CHAIN

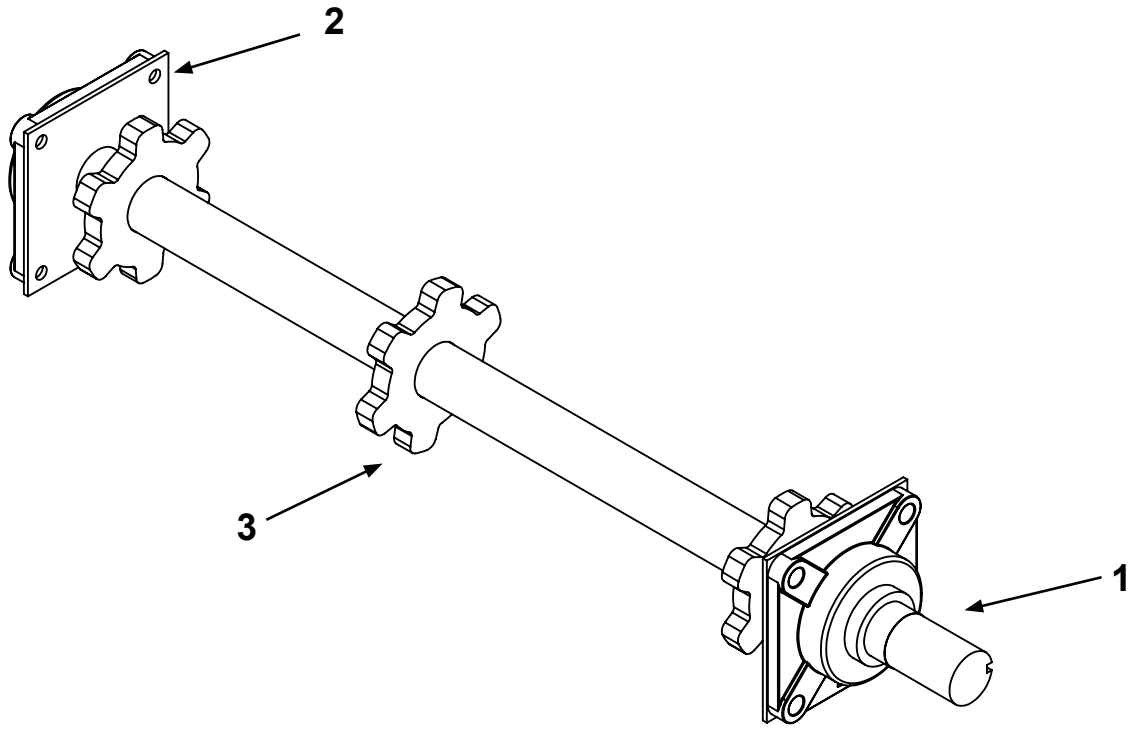

ITEM	PART NO.	DESCRIPTION	QTY
1.	60UCF211-32	2” Flange Bearing	2
2.	89 POLYSQUARES	Poly Squares 6.5 x 6.5	2
3.	42RR620088K3R	88K 3 Run	1

REPLACEMENT CONVEYOR CHAIN VERIFICATION

PLEASE FILL OUT THE NECESSARY INFORMATION AND FAX THIS PAGE TO BBI TO ENSURE THE CORRECT CHAIN IS MANUFACTURED FOR YOUR SPREADER.

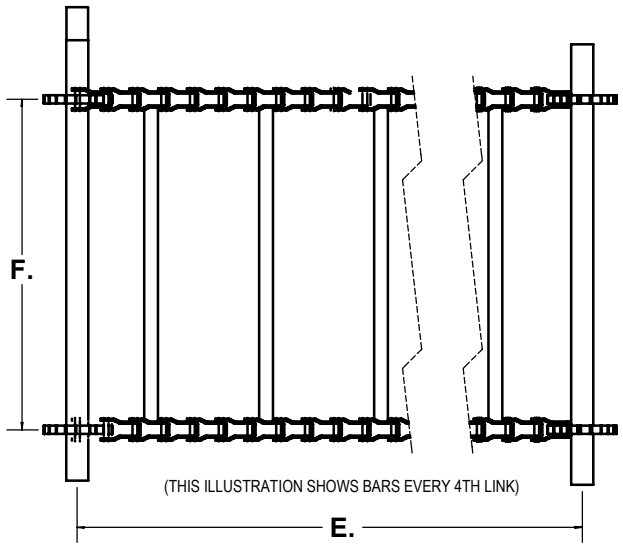

88K CHAIN LINK **OR** **667X CHAIN LINK**

CUSTOMER NAME: _____

STANDARD BBI CONVEYOR CHAIN

A. BBI Serial Number: _____

B. Hopper Length: _____

C. Chain Type: _____

D. Bar Location: (Circle One):

Bars Every 4th Link

Bars Every 5th Link

Bars Every Other Link

IF A BBI SERIAL # IS NOT AVAILABLE, THEN PLEASE FILL OUT THE INFORMATION BELOW:

E. Distance From Center of Rear Roller to Center of Front Roller:

_____

F. Distance From Center to Center of Sprockets:

_____

PLEASE PROVIDE SIGNATURE TO VERIFY THE INFORMATION PROVIDED IS CORRECT

Signature of Dealer	Dealer Name	Date
Signature of Customer	Customer Name	Date

F: TORSION FLEX AXLE

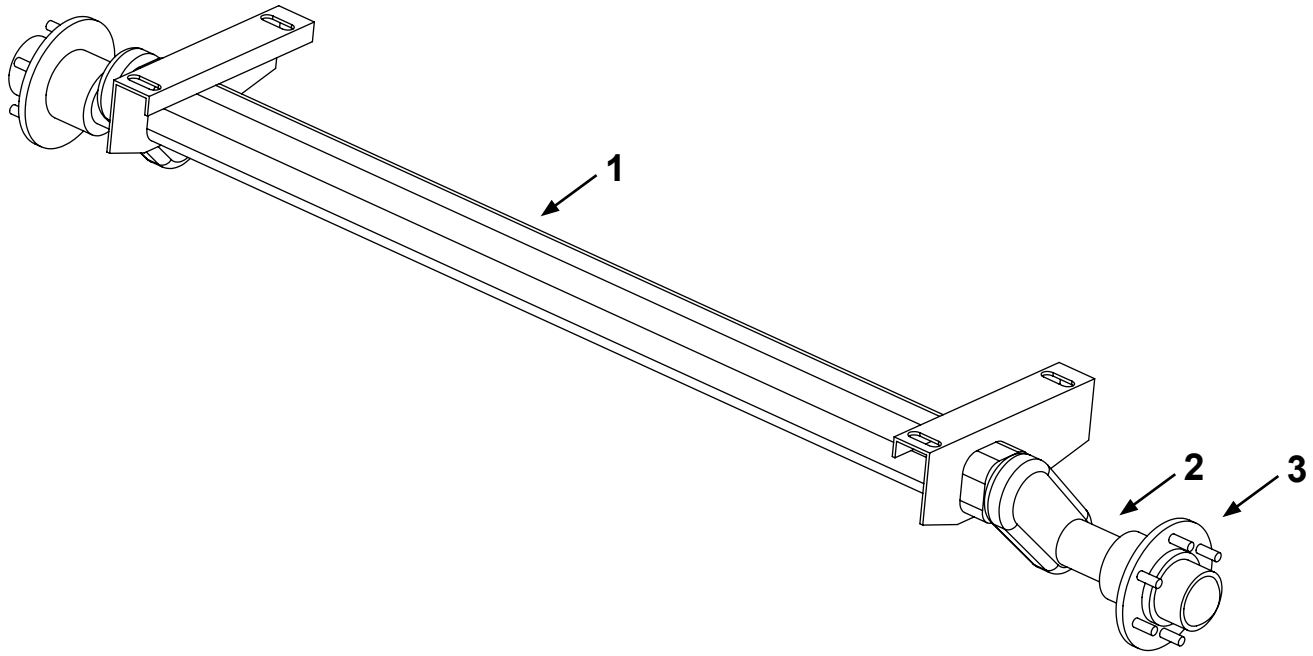

NON BRAKE TORSION FLEX AXLES - 45°			
ITEM	PART NO.	DESCRIPTION	QTY
1.	21AXBB7700224i	7K Axle Assembly 6 Bolt	1
	21AXBB710118i	10K Axle Assembly 8 Bolt	1

BRAKE EQUIPPED AXLES			
ITEM	PART NO.	DESCRIPTION	QTY
	21AXBB7101302 H	10K Brake Axle Assembly 8 Bolt	1

ITEM	PART NO.	DESCRIPTION
2.	7K 10K Spindle	See Diagram F1 / F2
3.	7K Hub / 10K Hub	Diagram F1 / F2

F1: 7,000 LB (7K) HUB ASSEMBLY
22AX3160340A (6 BOLT) - NO SPINDLE

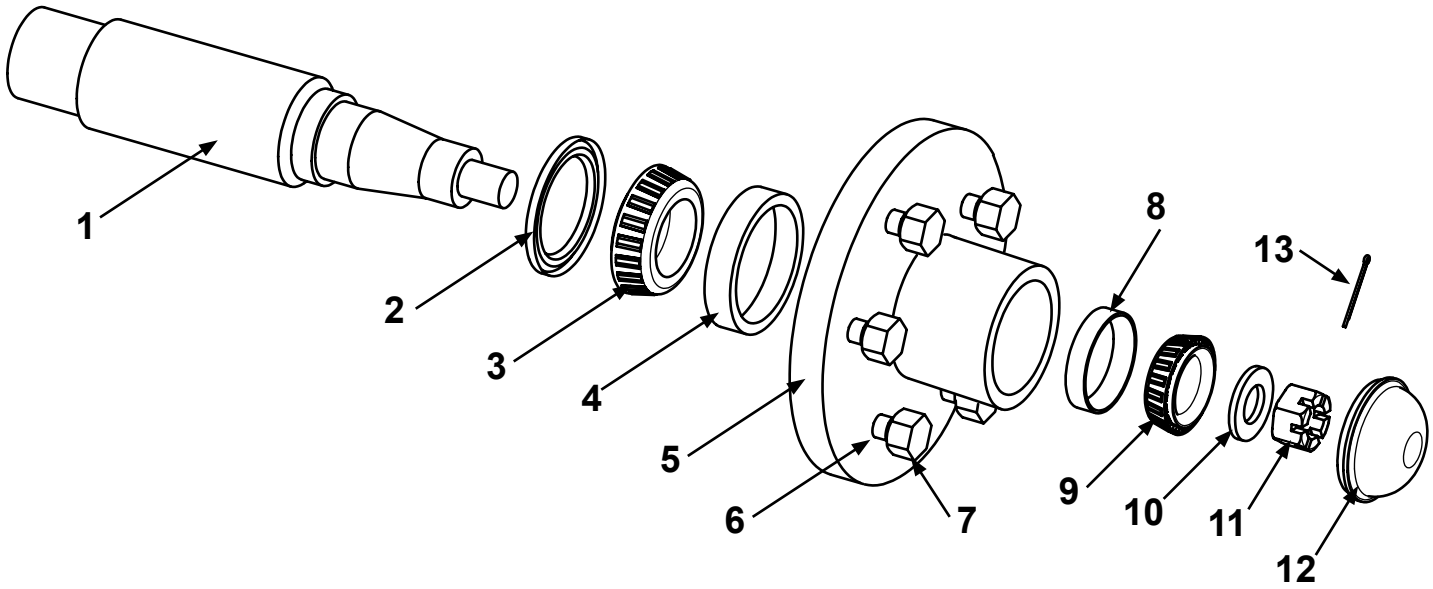

ITEM	PART NO.	DESCRIPTION	QTY
1.	22AXS-3500F	7K Spindle Shaft	1
2.	22AXSL-200	7K Oil Seal	1
3.	22AX501349	7K Inner Bearing	1
4.	22AX501310	7K Inner Race	1
5.	22AX3160340	7K 6 Lug Hub Only	1
6.	22AXB0250195	Press-in Stud	1
7.	22AXB0190032	Lug Nut	1
8.	22AX67010	7K Outer Race	1
9.	22AX67048	7K Outer Bearing	1
10.	22AXSW-1000	7K Axle Washer	1
11.	22AXSN-1000	7K Axle Nut	1
12.	22AX1604	7K Dust Cap	1
13.	22AXSCP-100	7K Cotter Pin	1

F2: 10,000 LB (10K) HUB ASSEMBLY
22AX3160424A (8 BOLT)

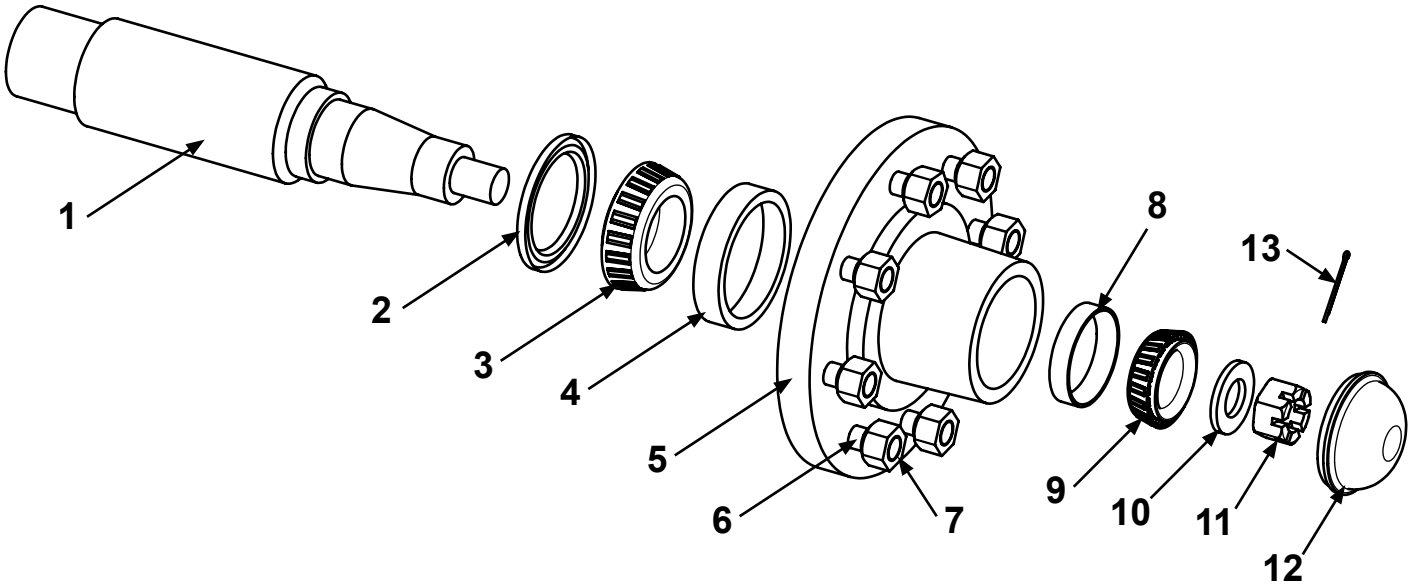

ITEM	PART NO.	DESCRIPTION	QTY
1.	22AXS-6000F	10K Spindle Shaft	1
2.	22AXSL-275	10K Oil Seal (CR27394)	1
3.	22AX506849	10K Inner Bearing	1
4.	22AX506810X	10K Inner Race	1
5.	22AX3160424	10K 8 Lug Hub Only	1
6.	22AXST-625	5/8” x 18-90 Press-in Stud	1
7.	22AXSTN-629	5/8” x 18-90 Lug Nut	1
8.	22AX501310	10K Outer Race	1
9.	22AX501349	10K Outer Bearing	1
10.	22AXSW-1001	10K Axle Washer	1
11.	22AXSN-1001	10K Axle Nut	1
12.	22AX1609	10K Dust Cap	1
13.	22AXSCP-102	10K Cotter Pin	1

F3: 12,000 LB (12K) HUB ASSEMBLY
22AXBF2891300A (10 BOLT)

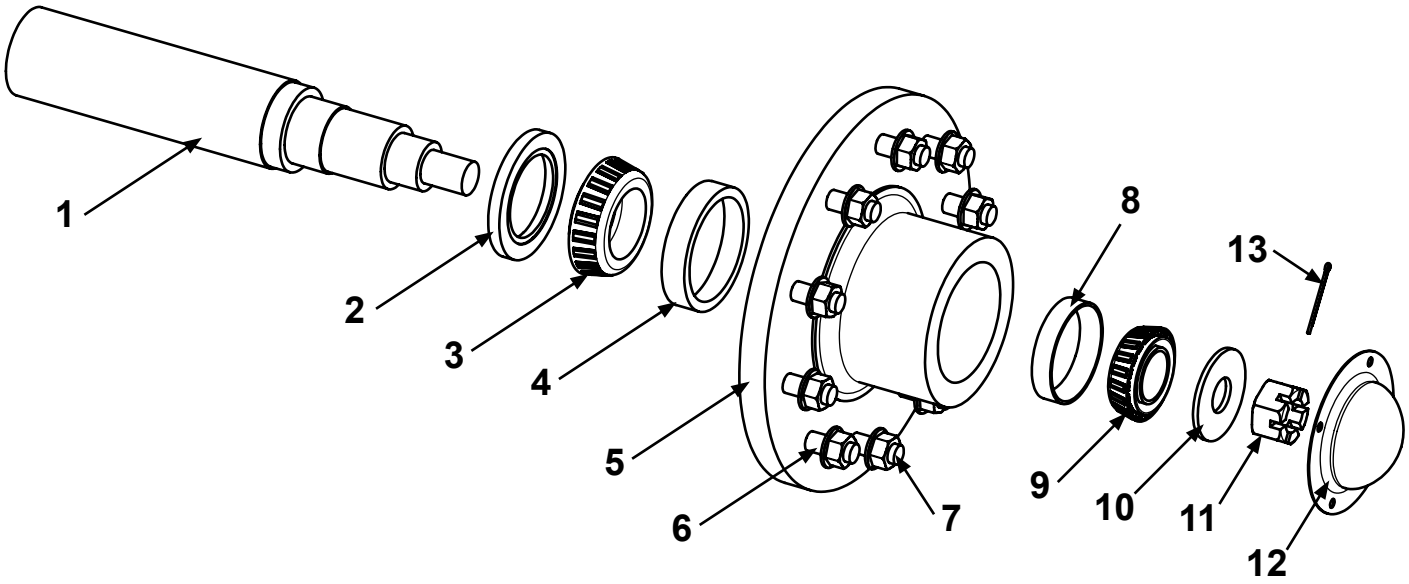

ITEM	PART NO.	DESCRIPTION	QTY
1.	22AXBB281309	12K Spindle Shaft	1
2.	22AXBB906497	12K Oil Seal 2	1
3.	22AXBB910333	12K Inner Bearing	1
4.	22AXBB910331	12K Inner Race	1
5.	22AXBF2891300	12K 10 Lug Hub Only	1
6.	22AXBB13564	12K Press in Stud	1
7.	22AXBB913571	12K Flanged Nut	1
8.	22AXBB910332	12K Outer Race	1
9.	22AXBB910334	12K Outer Bearing	1
10.	22AXBB913632	12K Axle Washer	1
11.	22AXBB913571	12K Axle Nut	1
12.	22AXBB909983	12K Dust Cap	1
13.	22AXSCP-103	12K Cotter Pin	1

TIRES

Endurance Tires							
Suspension	**Tires**	**Wheel**	**Hub**				
10K Torsion Axle	16.5 x 16.1	W14C x 16. 1	8 Bolt				
10 Ton Walking Beam	16.5 x 16.1	W14C x 16. 1	8 Bolt				
14 Ton Walking Beam	21.5 x 16.1	W16C x 16.1	10 Bolt				
20 Ton Walking Beam	710/50-30.5	Call	10 Bolt				

*Most common packages are listed above

*Proper identification can be made through calling the factory with your product serial number

G: TANDEM GEARCASE WITH AND WITHOUT SENSOR

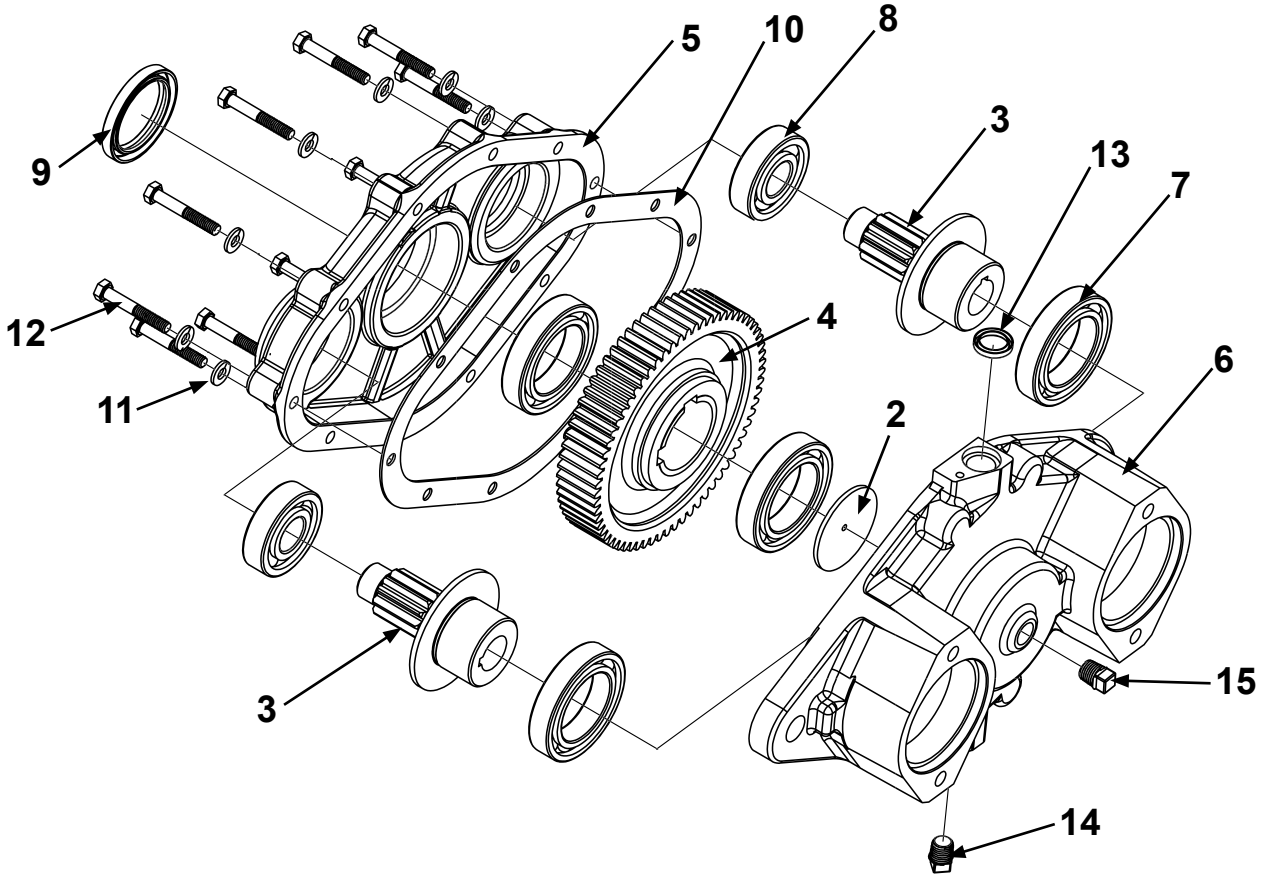

ITEM	PART NO.	DESCRIPTION	QTY
1.	70301505	Key and Plug Kit (Key and 3 Plugs)	1
2.	70311062	Washer	1
3.	70313077	Pinion Gear - 11 Tooth	2
4.	70313084	Drive Gear - 67 Tooth	1
5.	70315052	Tandem Inboard Housing	1
6.	70315090	Tandem Outboard Housing with Sensor (LH)	1
	70315082	Tandem Outboard Housing without Sensor	1
7.	70601151	Bearing (Large 50 x 80 x 16mm)	4
8.	70601173	Small Output Bearing	2
9.	70601350	Oil Seal	1
10.	70611952	Tandem Gearcase Gasket	1
11.	70617006	Lock Washer	10
12.	70620041	Capscrew	10
13.	70601360	Seal for Sensor	1
14.		Plug (Purchase in Key and Plug Kit)	1
15.		Center Fill Plug (Purchase in Key Kit)	1

H: SPINNER SYSTEM COMPONENTS (1 OF 2)

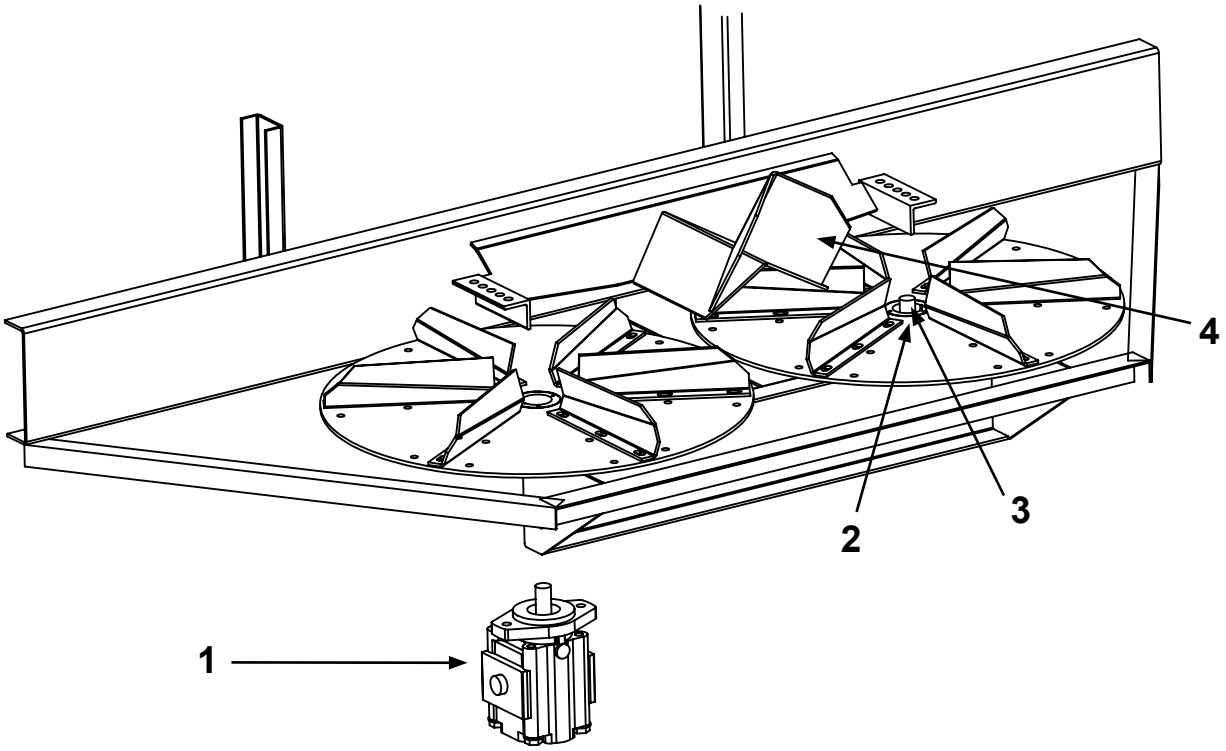

ITEM	PART NO.	DESCRIPTION	QTY
1.	3121SDM25	2.5” Motor	2
	31M2100SK152025	Seal Kit	1
	30Q1956-4	Seal Installation Tool. Required to properly install new motor pressure seal.	1

ITEM	PART NO.	DESCRIPTION	QTY
2.	58HP113-CL	Bolt on Hub	1
3.	50P 1100	Tapered Locking Hub	1
4.	52LFD 100	Litter Flow Divider	1

H: SPINNER SYSTEM COMPONENTS (2 OF 2)

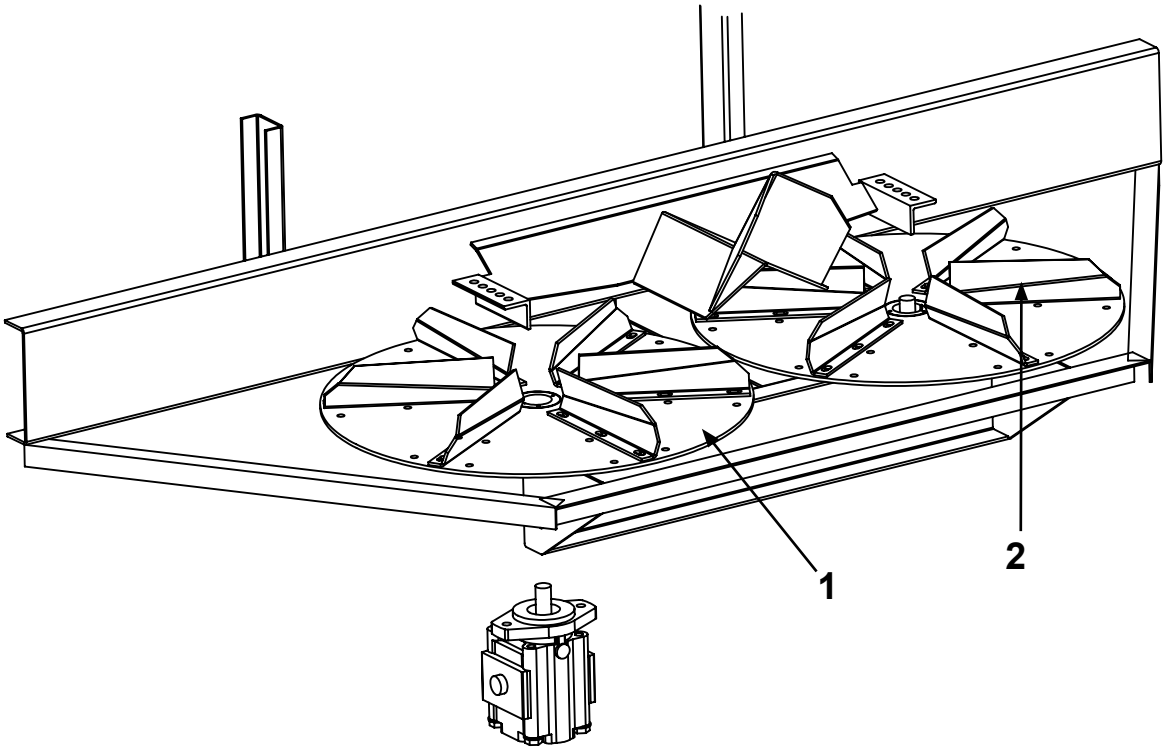

	PART NO.	DESCRIPTION	QTY
1.	50CL28A RH	Right Hand Disc Assembly (Fins, Disc, Hub, Plate)	1
	50CL28A LH	Left Hand Disc Assembly (Fins, Disc, Hub, Plate)	1
	50CL28D RH	Right Hand Disc (Disc, Hub, Plate)	1
	50CL28D LH	Left Hand Disc (Disc, Hub, Plate)	1
2.	51CL 11- RH	11” Fin - Right Hand	6
	51CL 11- LH	11” Fin - Left Hand	6

I: HYDRAULIC MOTORS

SPINNER MOTORS

Motor Part# 3121SDM25

Seal Kit Part# 31M2100SK152025

Motor Pressure Seal Installation Tool Part# 30Q-1956-4

NOTE: For proper installation of motor seal kit, the motor pressure seal installation tool must be used.

CONVEYOR / CHAIN MOTORS

Motor Part# 31BMPH250H2KP

Seal Kit Part# 31BMPH

SPINNER MOTOR

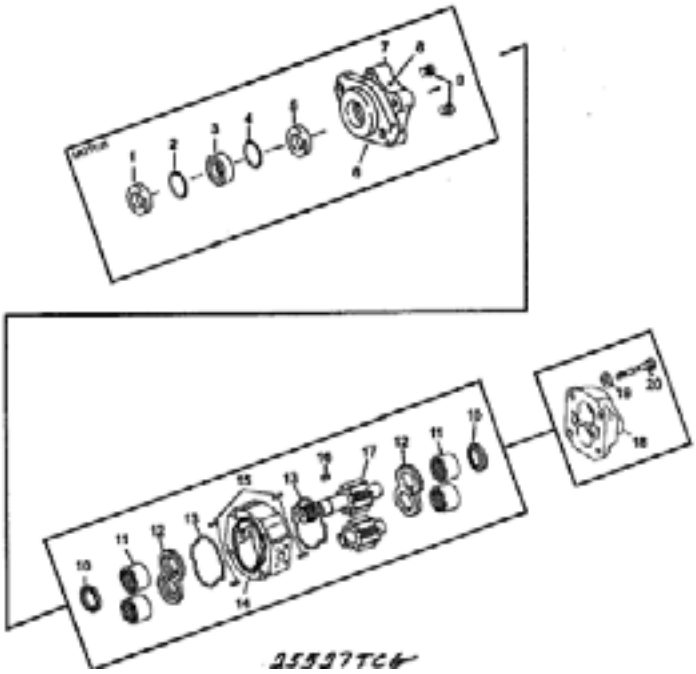

ITEM	PART NO.	DESCRIPTION	QTY
1.	25527TCG	Grease Seal	1
2.	W023-206	Snap Ring	1
3.	MZ-0961	Tell-Tale Seal Retainer	1
4.	K-2995-109	Seal Retainer O-Ring	1
5.	W62-49-9	Shaft Seal	1
6.		1/8” NPT Grease Fitting Hole	
7.		2-Bolt-B Shaft End Cover (SEC)	1
8.	W0-17	Pipe Plug 1/4” NPT for (SEC)	1
9.	L-0280-K	Check Valve Assembly	2
10.	KA-0558-1XS	Ring Seal	2
11.	X-0921	Roller Bearing	4
12.	ZZ-0947-TC	Thrust Plate	2
13.	K-2995-240	Gear Housing Gasket Seal	2
14.		Gear Housing	1
15.	280-1971-031	Dowel Pin	4
16.	W09-02	Shaft Key	1
17.		Gear Set	1
18.	592-00662	Port End Cover (PEC)	1
19.	W033-3	Washer 9/16”	4
20.		Hex Head Bolt	4

REMOTE MOUNT PUMP (1 OF 2)

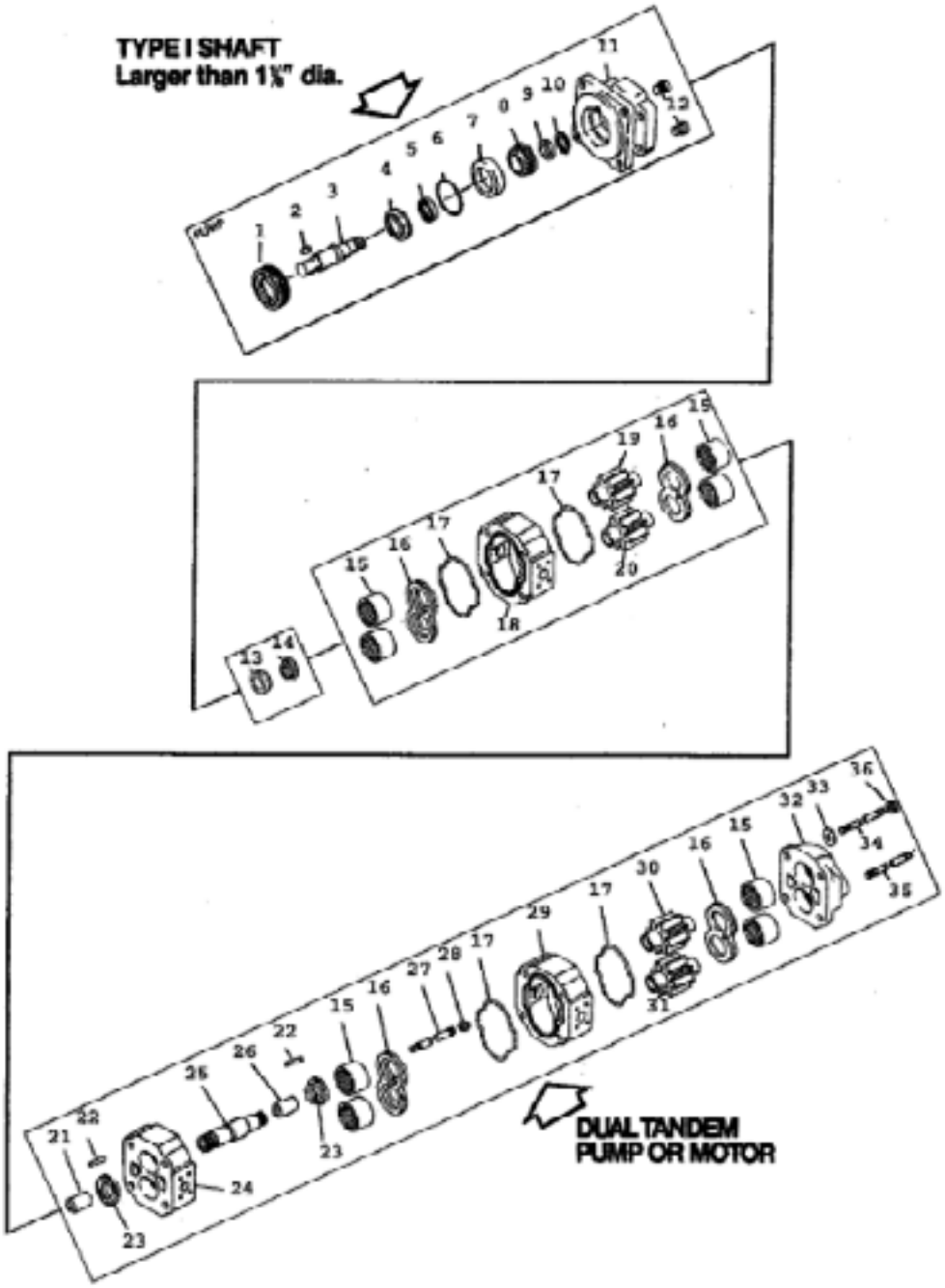

REMOTE MOUNT PUMP (2 OF 2)

ITEM	PART NO.	DESCRIPTION	QTY
1.	V-0961	Retainer Ring	1
2.	W09-27	Shaft Key	1
3.	QA-0024	Shaft 1 1/4” Dia. Keyed	1
4.	RZ-0558	Seal Retainer	1
5.	W62-26-13	Pump Shaft Seal	1
6.	K-2995-26	O-Ring	1
7 & 8.	W015-7	Taper Bearing	1
9.	XZ-0558-1	Shaft Spacer	1
10.	W86-100	Snap Ring	1
11.	RZ-0575-3	Type 1 Pad Mount (SEC)	1
12.	L-0280-K	Check Valve	2
13.	ZG-1909	Shaft Bushing	1
14.	Z-0216-182	Spring	1
15.	R-0921	Roller Bearing	8
16.	X-0947-TC	Thrust Plate	4
17.	TA-2995-244	Gear Housing Gasket Seal	4
18.	LZ-0577-25-5	Gear Housing 2 1/2”	1
19 & 20.	JZ-0996L-25	Gear Set 2 1/2”	1
21.	SZ-0408-9	Gear Spacer 2 1/8”	1
22.	W004-19	Roll Pin	2
23.	ZQ-1909	Shaft Bushing Slotted	2
24.	JA-0576	Bearing Carrier (BC)	1
25.	SZ-0022	Connecting Shaft	1
26.	SZ-0408-9	Gear Spacer 2 1/8”	1
27.	3/8”-16	Threaded Rod	1
28.	W78-05	Lock Nut	1
29.	LZ-0577-25-5	Gear Housing 2 1/2”	1
30 & 31.	JZ-0996L-25	Gear Set 2 1/2”	1
32.	QZ-0592	Port End Cover (PEC)	1
33.	W033-2	Washer 5/8”	4
34.	ZD-0391-125	Tie Bolt 12 1/2”	2
35.	ZD-0391-142	Tie Bolt 14 1/4”	2
36.	W3-65	Hex Nut 5/8” - 11	4

J. GATE COMPONENTS

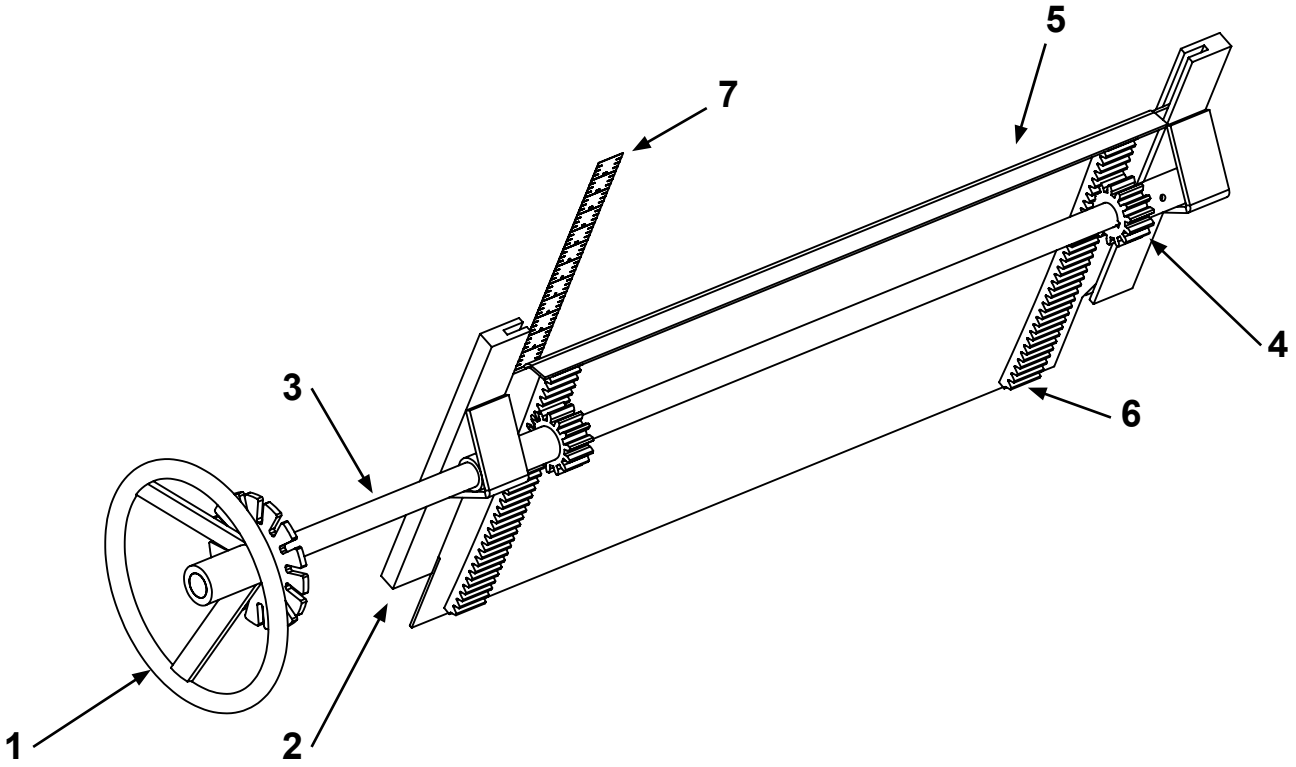

ITEM	PART NO.	DESCRIPTION	QTY
1.	53GWB-5	Gate Wheel	1
2.	53GS	Gate Slide	2
3.	53GSC	Gate Shaft (Carbon)	1
4.	53GWS-2	Spur Gear	1
5.	53CLGate	Gate	1
6.	53GWS-3	Gear Rack	2
7.	53GGLS	Gate Gauge	1
8.	53RG-15	Gate with Gear Rack	1